* Proper Venting of Combustion Appliances
* Presented By

* James R. Hall
* Training Coordinator II
* Ohio Weatherization Training Center
* jhall@coadinc.org

You Will Need

* NFPA 54 Gas 2012
* NFPA 31 Oil 2011
* NFPA 211 Chimneys, Fireplaces, Vents, and Solid Fuel Burning Appliances 2013
* nfpacatalog.org

OHIO Weatherization Training Center

Wall Furnace Vents From The Top with Oval Pipe Installs On Inside or outside wall

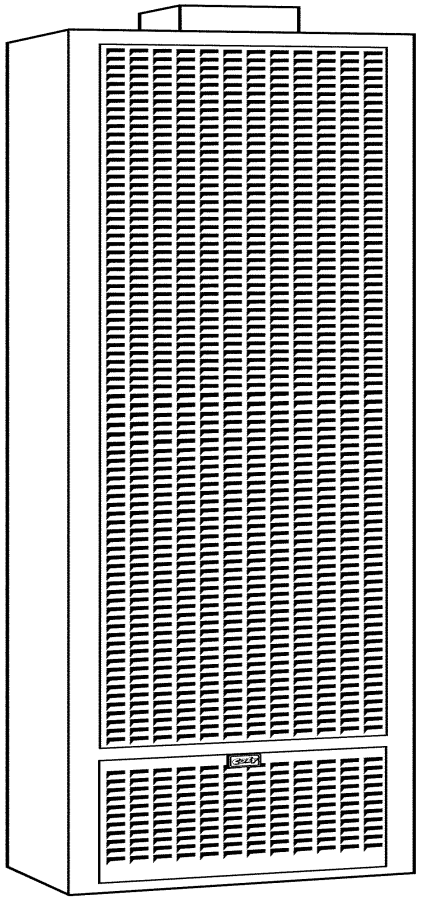

OHIO Weatherization Training Center

Oval Type B Gas Vent

Wright or Wrong ?

OHIO Weatherization Training Center

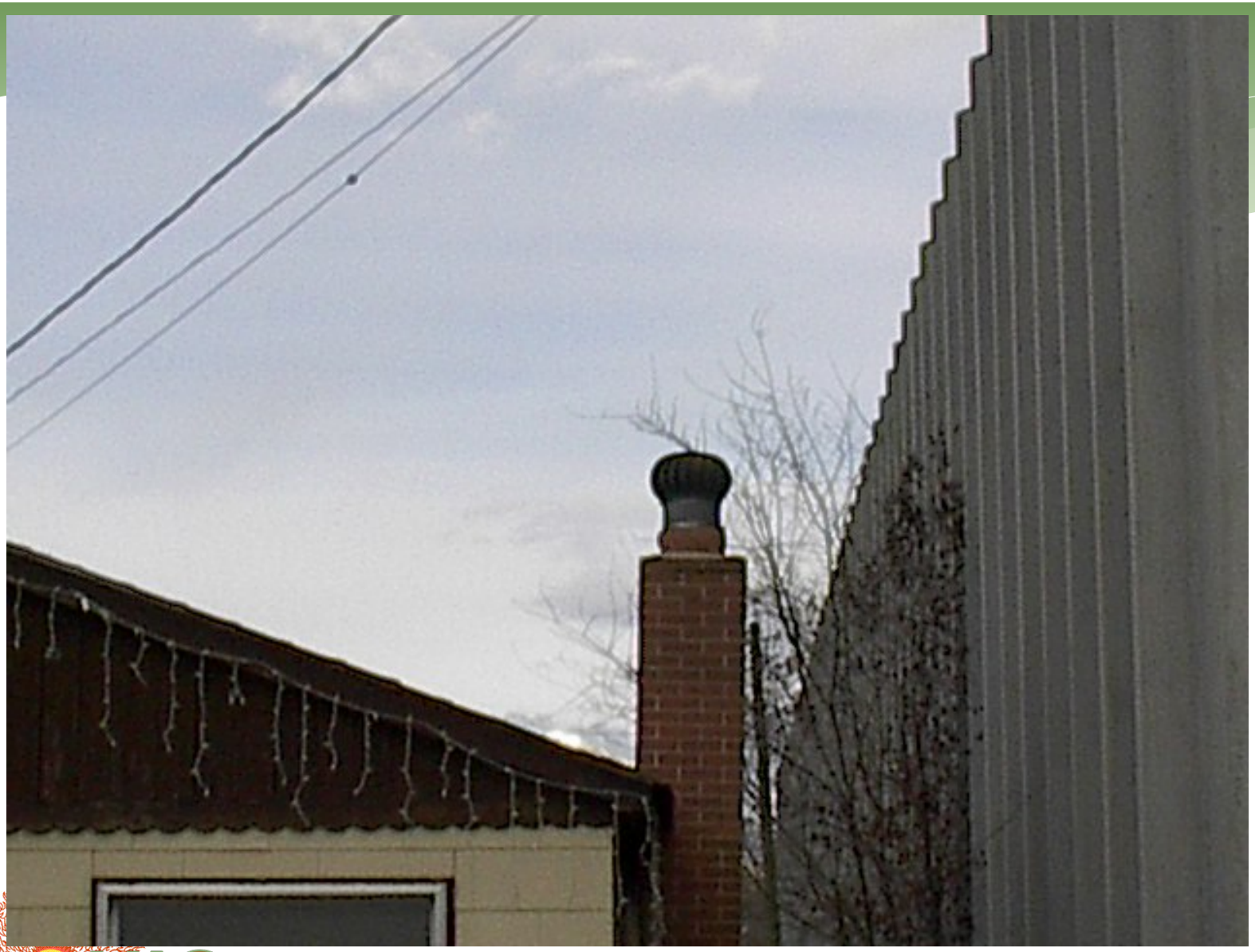

OHIO Weatherization Training Center

20 8:30AM
www.checkthishouse.com

Plugged Flue

OHIO Weatherization Training Center

Condensate Problems

Critter Problems

DRAIN
30 4:40PM

So how do we deal with these vent problems

OHIO Weatherization Training Center

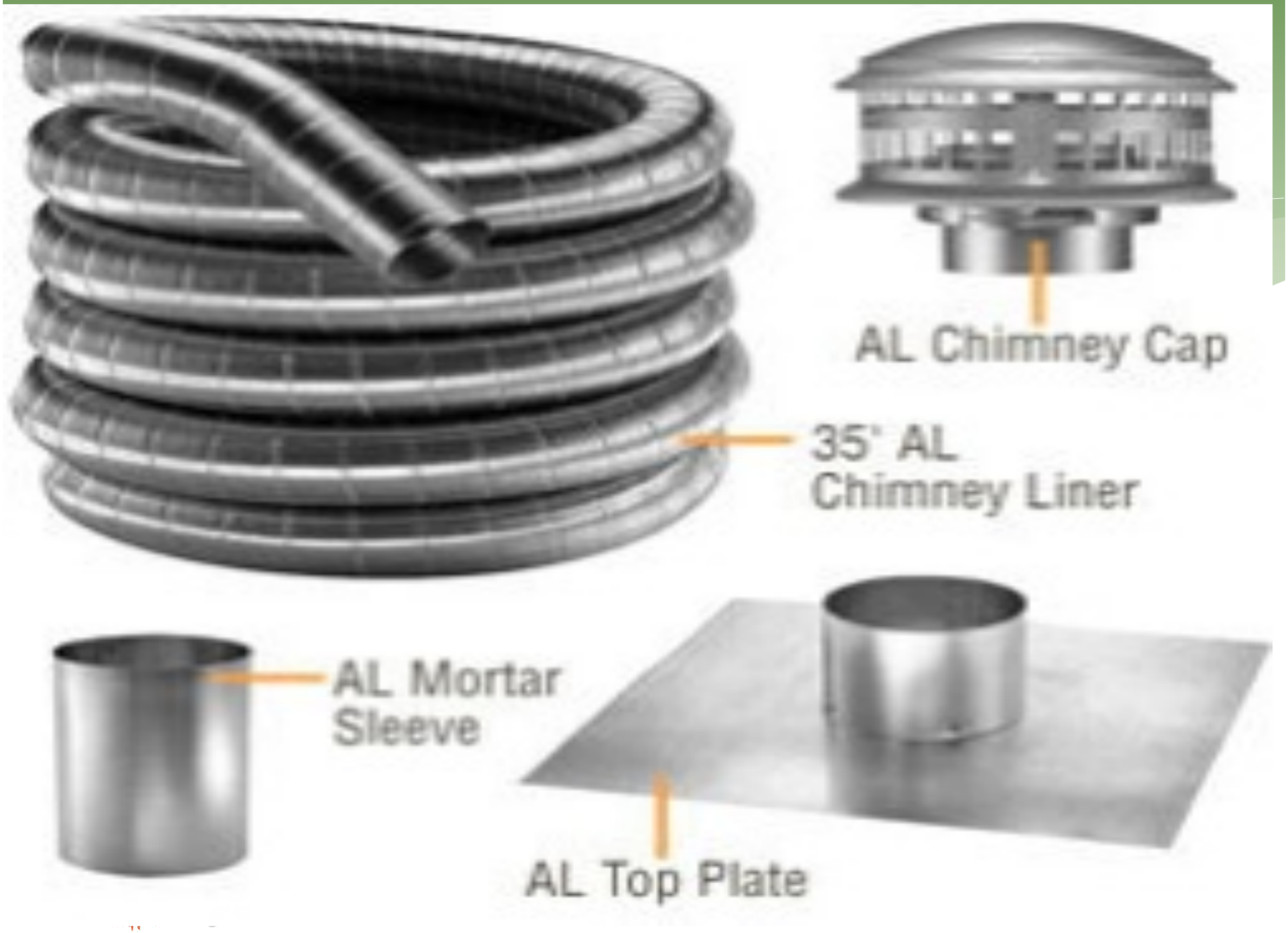
AL Chimney Cap
35' AL
Chimney Liner
AL Mortar
Sleeve
AL Top Plate

EXCELLENCE IN FLEX

SINGLE CATEGORY I APPLIANCE

(Appliances listed for use with B-Vent)
GAS VENT CAPACITY FOR FLEXI-LINER
(Derated 20% from B-Vent Tables)

Height "H"	Connector Double or Single Wall "C"	Lateral "L"	FLEXI-LINER Diameter - "D" (inches) 3"			4"			5"			5.5"			6"			7"		
			Appliance INPUT Rating in Thousands of BTU per Hour																	
			FAN Min	FAN Max	NAT Max	FAN Min	FAN Max	NAT Max	FAN Min	FAN Max	NAT Max	FAN Min	FAN Max	NAT Max	FAN Min	FAN Max	NAT Max	FAN Min	FAN Max	NAT Max
15'	Double	5'	22	52	36	36	104	70	38	175	114	44	220	144	49	264	174	64	370	240
		10'	29	47	33	40	97	66	51	165	106	56	209	137	64	252	166	84	356	230
	Single	5'	*	*	35	75	102	69	102	173	112	123	217	143	144	261	174	182	367	238
		10'	*	*	31	*	*	63	121	161	105	155	209	134	182	246	162	228	350	227
25'	Double	5'	21	60	41	29	121	82	37	207	135	42	261	170	46	316	206	60	448	289
		10'	28	54	38	38	113	77	49	197	129	55	250	162	61	303	198	79	432	277
	Single	5'	49	57	40	73	119	80	99	204	132	119	258	168	138	312	204	175	444	287
		10'	*	*	*	66	109	74	124	191	126	149	224	159	174	297	193	218	425	274
30'	Double	5'	21	62	43	28	128	86	36	220	141	41	279	180	45	337	218	58	480	308
		10'	27	56	40	37	120	82	48	210	137	54	267	173	58	324	209	77	464	297
	Single	5'	49	59	42	72	126	85	96	217	138	117	276	178	138	334	217	171	476	306
		10'	*	*	*	91	115	78	122	204	134	147	261	170	171	318	208	213	456	294
35'	Double	5'	21	63	32	38	132	88	36	228	146	40	289	185	45	350	225	57	501	319
		10'	27	57	30	37	124	84	47	217	141	53	277	179	58	337	216	76	484	308
	Single	5'	49	60	*	72	129	87	97	224	143	116	286	183	135	347	224	169	496	317
		10'	*	*	*	91	118	83	121	212	138	145	271	175	168	331	213	211	476	306
45'	Double	5'	21	65	*	38	139	93	36	243	156	40	311	197	44	377	239	57	542	348
		10'	27	60	*	36	131	89	47	232	149	52	298	190	56	364	231	75	525	338
	Single	5'	49	63	*	71	136	92	96	239	153	115	306	196	134	373	238	168	537	338
		10'	*	*	*	90	125	*	120	227	146	143	292	187	167	356	227	205	517	326

* Not Recommended

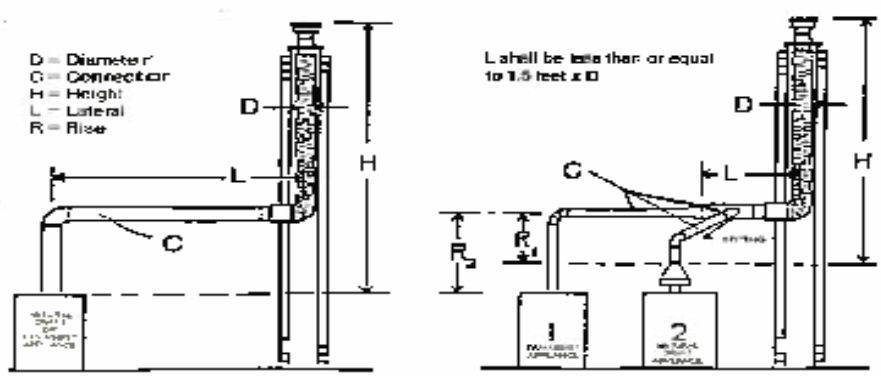

1/Nov/93

Printed in Canada

OHIO Weatherization Training Center

TWO OR MORE CATEGORY I APPLIANCES

(Appliances listed for use with B-Vent)
GAS VENT CAPACITY FOR FLEXI-LINER
(Derated 20% from B-Vent Tables)

Height "H"	Connector Double or Single Wall "C"	FLEXI-LINER Common Vent Diameter - "D" (Inches) 4"			5"			5.5"			6"			7"			8"		
		Combined Appliance INPUT Rating in Thousands of BTU per Hour																	
		FAN +FAN	FAN +NAT	NAT +NAT	FAN +FAN	FAN +NAT	NAT +NAT	FAN +FAN	FAN +NAT	NAT +NAT	FAN +FAN	FAN +NAT	NAT +NAT	FAN +FAN	FAN +NAT	NAT +NAT	FAN +FAN	FAN +NAT	NAT +NAT
15'	Double	100	90	73	156	131	115	192	157	140	227	192	165	342	282	224	445	365	292
	Single	97	85	70	151	127	112	185	152	136	229	177	158	333	274	219	435	347	286
25'	Double	116	104	86	184	157	138	227	188	168	270	221	196	409	341	268	530	434	351
	Single	111	100	84	178	152	134	220	183	163	262	214	192	398	332	261	524	429	342
30'	Double	122	110	94	195	168	148	242	203	181	289	236	213	438	367	288	576	468	376
	Single	116	106	90	185	162	143	235	196	175	280	229	206	426	357	279	562	456	367
35'	Double	125	113	98	202	175	154	252	212	188	301	249	222	457	386	300	603	492	392
	Single	119	109	93	195	168	148	243	204	181	291	239	214	444	374	291	588	478	382
45'	Double	151	119	104	216	188	166	277	230	205	325	277	240	494	425	326	666	541	424
	Single	125	114	99	206	183	158	267	220	194	314	260	229	480	407	306	640	526	413

GENERAL VENTING REQUIREMENTS

1) Flexi-Liner systems are UL/ULC Listed for relining existing masonry or factory built chimneys and vents serving Category I natural gas or propane fired appliances.
2) Venting gas fired appliances into masonry chimneys is prohibited unless a "Listed" liner (i.e. Flexi-Liner) or a tile liner conforming to CODE is utilized. Oversized, misaligned and/or cracked tiles DO NOT constitute a "code" liner.
3) The air space around an installed Flexi-Liner System must not be used to vent other appliances.
4) Insulating of Flexi-Liner Systems is a benefit to the installation but not always essential to effective operation of this venting system. Consult the Flexi-Sleeve Installation instructions for insulation guidelines.
5) A Flexi-Liner System venting more than one appliance shall not be smaller in diameter than the outlet of the largest appliance being served.
6) The Flexi-Liner System may be smaller in diameter than the outlet of the appliance being served provided:
   a) the vent height is at least 10 feet.
   b) the liner size is not more than one size smaller.
   c) the "FAN MAX" is reduced by 10% if the appliance is "fan assisted".
   d) the outlet is larger than 4" if the appliance is "natural draft".
7) If the vent system contains more than two 90 elbows, the maximum capacity shall be reduced by 10% for each additional 90 elbow or equivalent offset(s).
8) If the vent connectors are combined prior to entering the common vent, the maximum capacities listed for two or more appliances shall be reduced by 10%.
9) The use of a "Y" fitting rather than a "T" fitting is recommended when common venting into a manifold system.
10) AVOID CONDENSATION and/or SPILLAGE OF FLUE GASES:
    a) Install Flexi-Liner as per installation instructions.
    b) Setup appliances as per appliance installation instructions.
11) Local authorities may over rule the foregoing. Consult with FLEX-L INTERNATIONAL INC. if such a situation occurs.

OHIO Weatherization Training Center

How often do corrugated chimney liners need to be inspected?

OHIO Weatherization Training Center

Inspection tool!!

Ohio Weatherization Training Center

Type B vent

* Were to and when to install.
* How to install.
* How to size .

OHIO Weatherization Training Center

To short and to close to the wires

Not Tall Enough

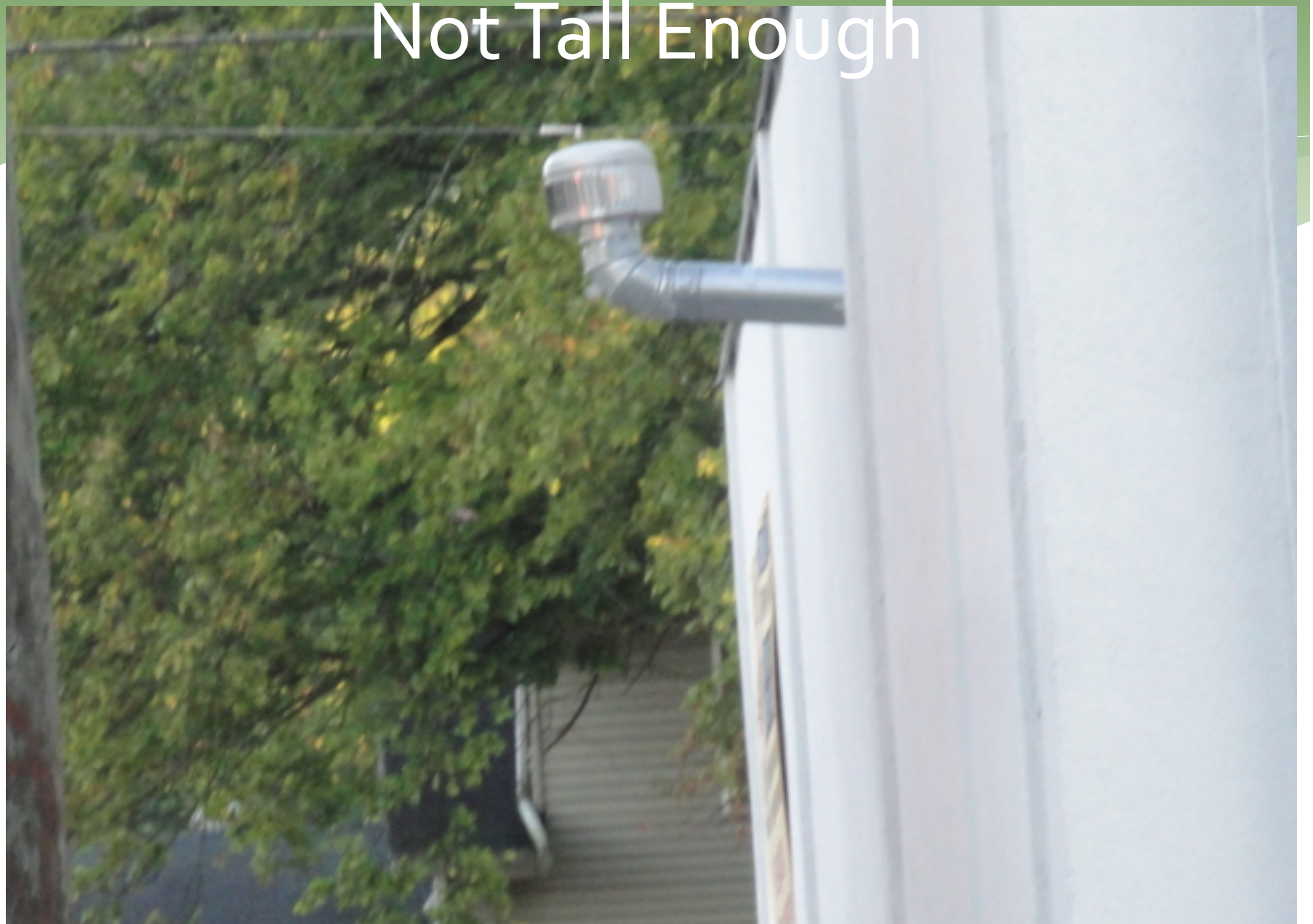

What could we do to fix this ?

Short and to close to windows

How many things wrong here?

Good install of how to close in B-Vent

Why do this ?

Profoil Ceramic B-Vent Blanket

OHIO Weatherization Training Center

Single Wall

* Clearance problems
* Location

OHIO Weatherization Training Center

www.checkthishouse.com

Notice the wire

How to fix a draft problem add more elbows

Extremely Dangerous

1 12:59 PM
www.checkthishouse.com

single wall vent pipe
Furnace installed in an unconditioned attic
requires double wall vent pipe

Disconnected Wall Furnace 'B' type Vent Pipe in Attic

Direct Vent Systems

OHIO Weatherization Training Center

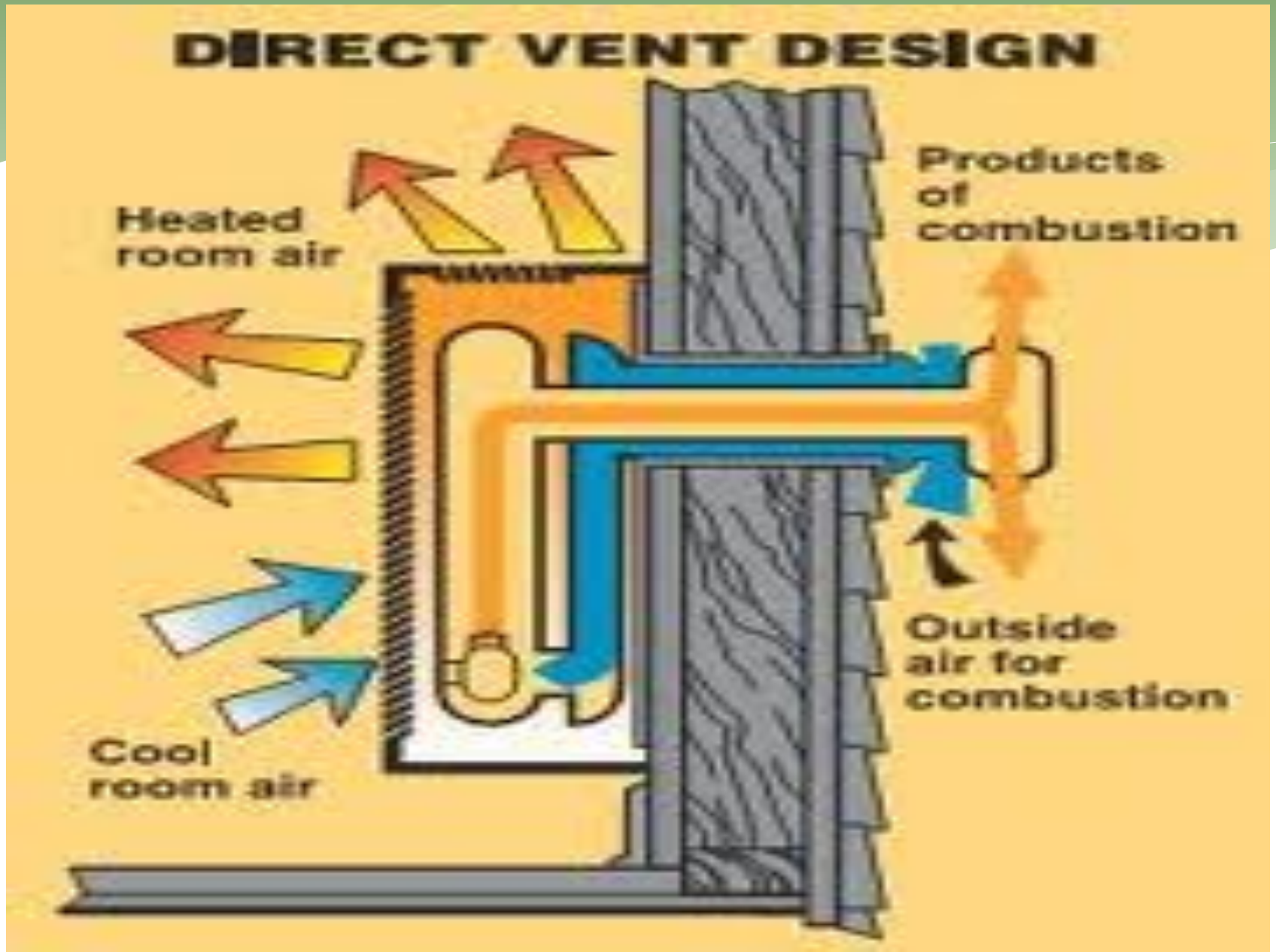
DIRECT VENT DESIGN
Heated room air
Products of combustion
Outside air for combustion
Cool room air

To close to inside wall.

OHIO Weatherization Training Center

How many problems here ?
New install. No test preformed here.

Rinnai Modulation Direct vent Space Heater Up To 83% Efficient

OHIO Weatherization Training Center

Direct Vent Termination Space Heater

OHIO Weatherization Training Center

The vent clearance is based on the BTU size of the unit. NFPA 54 section 12.9.3

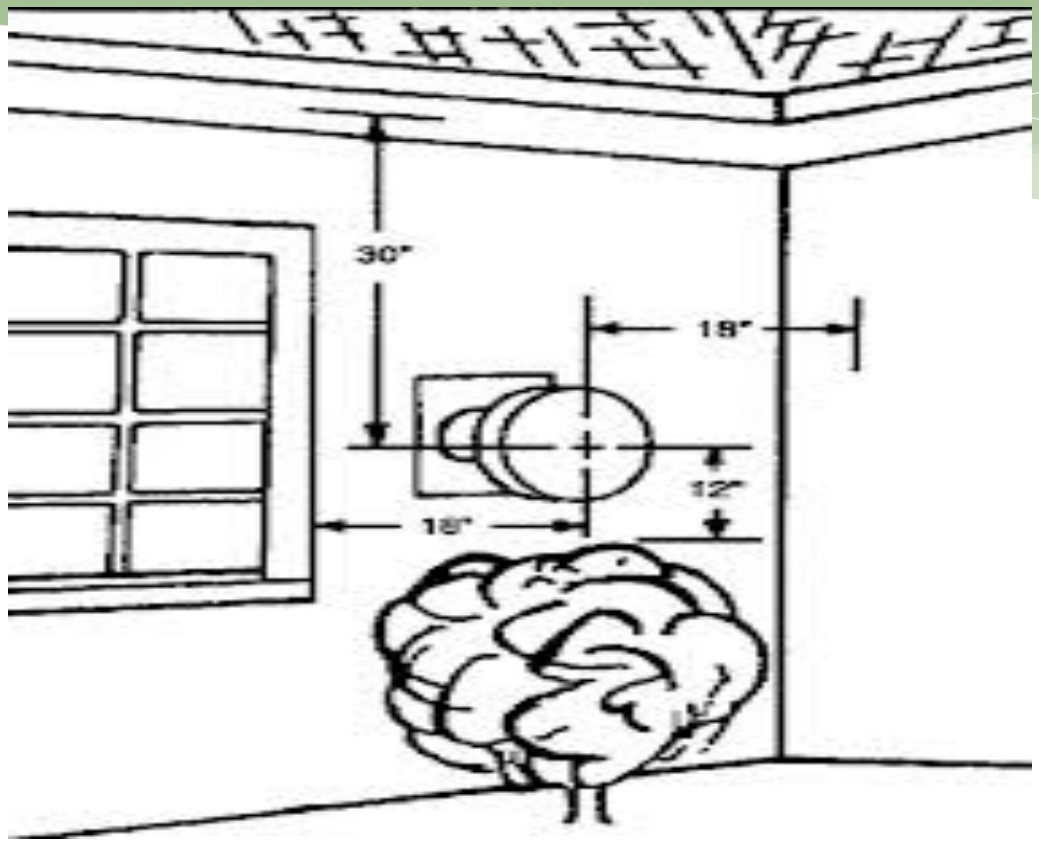

OHIO Weatherization Training Center

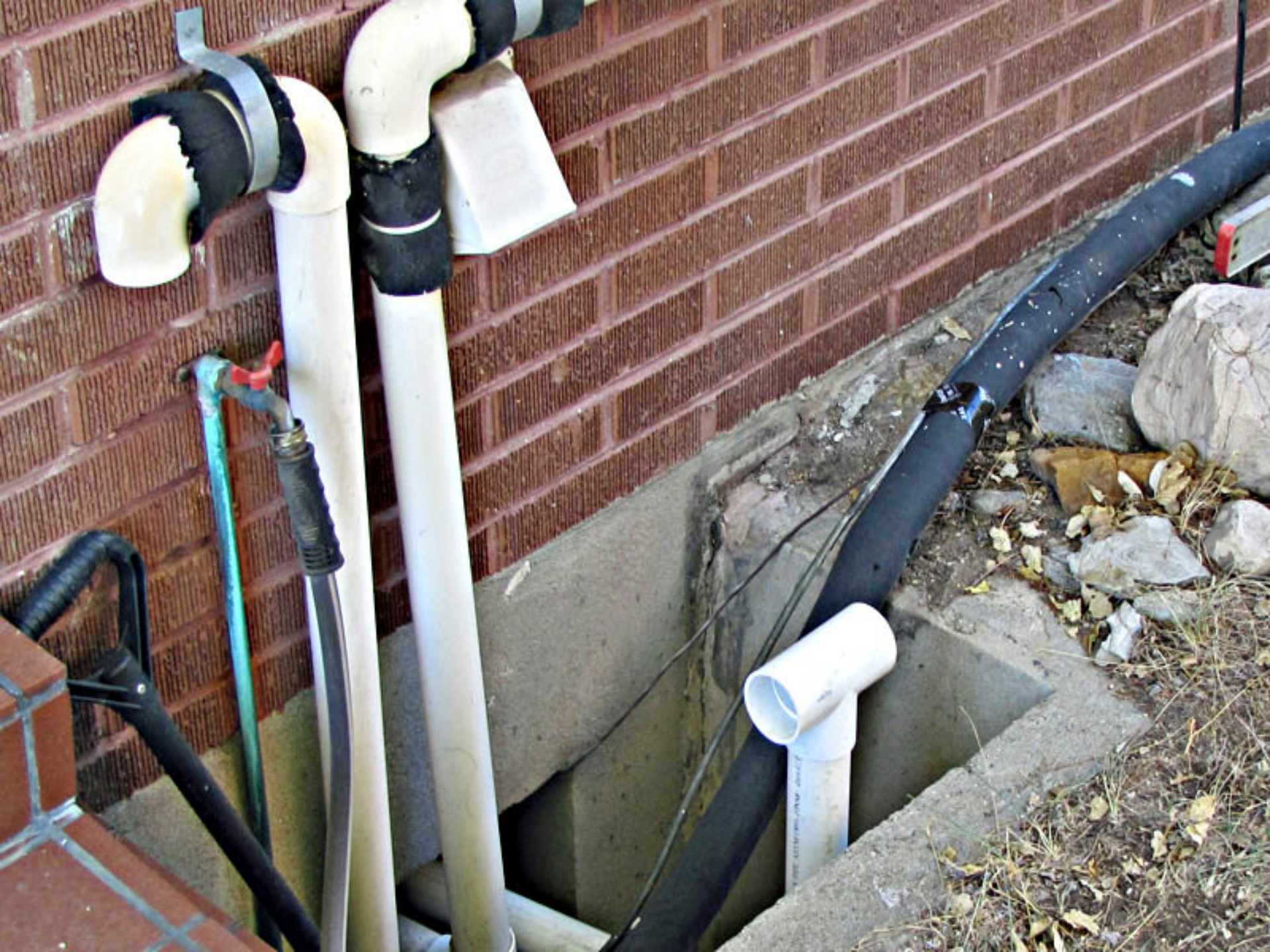

Concentric Flue

OHIO Weatherization Training Center

Need to check for above grade clearance .

© 2010 InspectAPedia.com

OHIO Weatherization Training Center

To close to dyer vent

OHIO Weatherization Training Center

Intake to close to gas meter. New install.

OHIO Weatherization Training Center

Mobile Home
Vent

Wood Stoves

OHIO Weatherization Training Center

Nice Job.

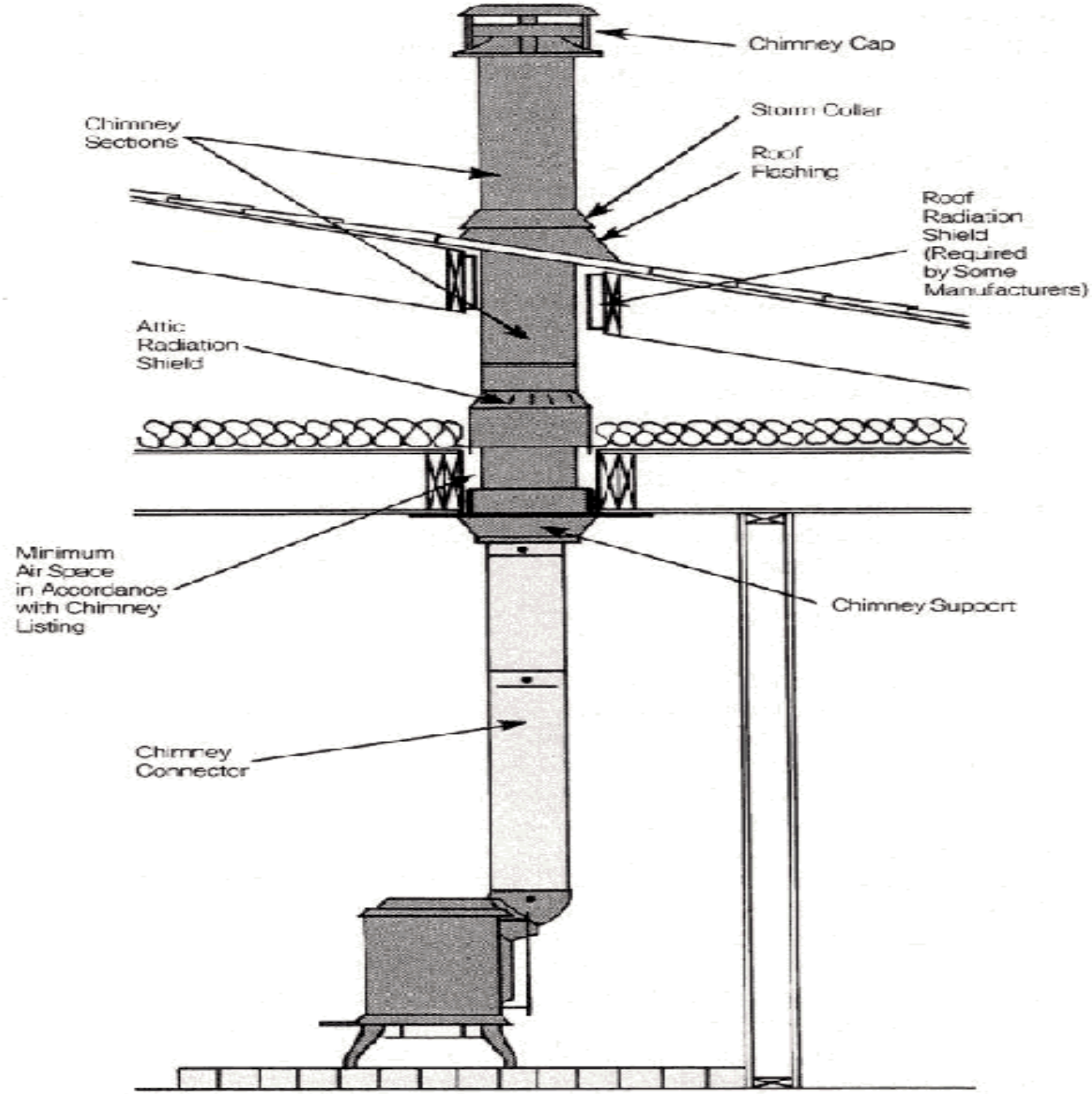

OHIO Weatherization Training Center

Not so nice.

OHIO Weatherization Training Center

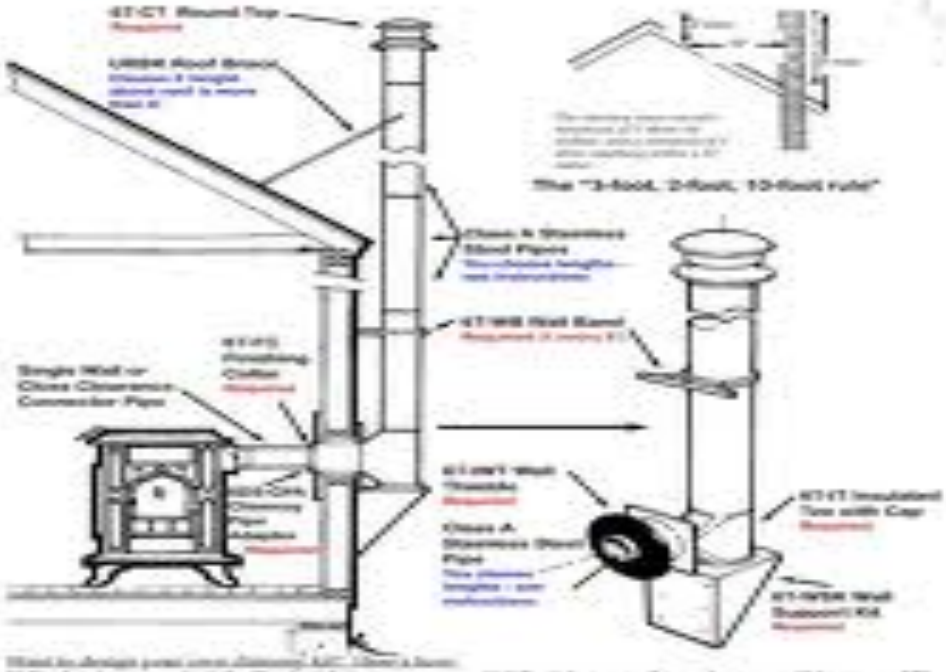

Ohio Weatherization Training Center

Proper install.

WARNING

DO NOT OPERATE THE SYSTEM WITHOUT FILTEAS. A PORTION OF THE DUST ENTRAINED IN THE AIR MAY TEMPORARILY LODGE IN THE AIR DUCT RUNS AND AT THE SUPPLY REGISTERS. ANY CIRCULATED DUST PARTICLES WILL BE HEATED AND CHARRED BY CONTACT WITH THE FURNACE HEAT EXCHANGER. THIS SOOTY RESIDUE WILL SOIL CEILINGS, WALLS, DRAPES, CARPETS AND OTHER HOUSEHOLD ARTICLES. SOOT DAMAGE MAY ALSO RESULT WITH, OR WITHOUT, FILTERS IN PLACE, WHEN CERTAIN TYPES OF CANDLES ARE BURNED, OR CANDLEWICKS ARE LEFT UNTRIMMED.

WARNING

NEVER TEST FOR GAS LEAKS WITH AN OPEN FLAME. USE A COMMERCIALLY AVAILABLE SOAP SOLUTION MADE SPECIFICALLY FOR THE DETECTION OF LEAKS TO CHECK ALL CONNECTIONS, AS SPECIFIED IN GAS SUPPLY AND PIPING SECTION OF THESE INSTRUCTIONS.

WARNING

ALWAYS INSTALL FURNACE TO OPERATE WITHIN THE FURNACE'S INTENDED TEMPERATURE-RISE RANGE WITH A DUCT SYSTEM WHICH HAS AN EXTERNAL STATIC PRESSURE WITHIN THE ALLOWABLE RANGE, AS SPECIFIED IN DUCTING SECTION OF THESE INSTRUCTIONS. SEE ALSO FURNACE RATING PLATE.

!.&WARNING!

WHEN A FURNACE IS INSTALLED SO THAT SUPPLY DUCTS CARRY AIR CIRCULATED BY THE FURNACE TO AREAS OUTSIDE THE SPACE CONTAINING THE FURNACE, THE RETURN AIR SHALL ALSO BE HANDLED BY DUCT(St SEALED TO THE FURNA E CASING AND TERMINATING OUTSIDE THE SPACE CONTAINING THE FURNACE.

WARNING

DO NOT INSTALL THIS FURNACE A MOBILE HOME!! THIS FURNACE IS NOT APPROVED FOR INSTALLATION IN A MOBILE HOME. DOING SO COULD CAUSE FIRE, PROPERTY DAMAGE, PERSONAL INJURY OR DEATH.

WARNING

WHEN THIS FURNACE IS INSTALLED IN A RESIDENTIAL GARAGE, IT MUST BE INSTALLED SO THE BURNERS AND IGNITION SOURCE ARE LOCATED NO LESS THAN 18 INCHES ABOVE THE FLOOR. THIS IS TO REDUCE THE RISK OF IGNITING FLAMMABLE VAPORS WHICH MAY BE PRESENT IN A GARAGE. ALSO, THE FURNACE MUST BE LOCATED OR PROTECTED TO AVOID PHYSICAL DAMAGE BY VEHICLES. FAILURE TO FOLLOW THESE WARNINGS CAN CAUSE A FIRE OR EXPLOSION, RESULTING IN PROPERTY DAMAGE, PERSONAL INJURY OR DEATH.

WARNING

DUCT LEAKS CAN CREATE AN SYSTEM AND DRAW POLLUTANTS SUCH AS DIRT, DUST, FUMES AND ODORS INTO THE HOME CAUSING PROPERTY DAMAGE. FUMES AND ODORS FROM TOXIC, VOLATILE OR FLAMMABLE CHEMICALS, AS WELL AS AUTOMOBILE EXHAUST AND CARBON MONOXIDE (CO), CAN BE DRAWN INTO THE LIVING SPACE THROUGH LEAKING DUCTS AND UNBALANCED DUCT SYSTEMS CAUSING PERSONAL INJURY OR DEATH (SEE FIGURE 3).

- IF AIR-MOVING EQUIPMENT OR DUCTWORK IS LOCATED IN GARAGES OR OFF-GARAGE STORAGE AREAS – ALL JOINTS, SEAMS, AND OPENINGS IN THE EQUIPMENT AND DUCT MUST BE SEALED TO LIMIT THE MIGRATION OF TOXIC FUMES AND ODORS INCLUDING CARBON MONOXIDE FROM MIGRATING INTO THE LIVING SPACE.
- IF AIR-MOVING EQUIPMENT OR DUCTWORK IS LOCATED IN SPACES CONTAINING FUEL BURNING APPLIANCES SUCH AS WATER HEATERS OR BOILERS - ALL JOINTS, SEAMS, AND OPENINGS IN THE EQUIPMENT AND DUCT MUST ALSO BE SEALED TO PREVENT DEPRESSURIZATION OF THE SPACE AND POSSIBLE MIGRATION OF COMBUSTION BYPRODUCTS INCLUDING CARBON MONOXIDE INTO THE LIVING SPACE.

WARNING

THE FURNACE MAY BE USED FOR HEATING OF BUILDINGS OR STRUCTURES UNDER CONSTRUCTION.

INSTALLATION MUST COMPLY WITH ALL INSTALLATION INSTRUCTIONS INCLUDING:

- PROPER VENT INSTALLATION;
- FURNACE OPERATING UNDER THERMOSTATIC CONTROL;
- RETURN AIR DUCT SEALED TO THE FURNACE;
- AIR FILTEAS IN PLACE;
- SET FURNACE INPUT RATE AND TEMPERATURE RISE PER RATING PLATE MARKING;
- MEANS FOR PROVIDING OUTDOOR AIR REQUIRED FOR COMBUSTION; UNBALANCED
- RETURN AIR TEMPERATURE MAINTAINED BETWEEN SS"F (13"C) AND 80"F (27"C); AND
- CLEAN FURNACE, DUCT WORK AND COMPONENTS UPON SUBSTANTIAL COMPLETION OF THE CONSTRUCTION PROCESS, AND VERIFY FURNACE OPERATING CONDITIONS INCLUDING IGNITION, INPUT RATE, TEMPERATURE RISE AND VENTING, ACCORDING TO THE INSTRUCTIONS AND CODES.

NOTICE

IMPROPER INSTALLATION, OR INSTALLATION NOT MADE IN ACCORDANCE WITH THE CSA INTERNATIONAL (CS CERTIFICATION OR T ESE INSTRUCTIONS, CAN RESULT IN UNSATISFACTORY OPERATION AND/OR DANGEROUS CONDI· TIONS AND ARE NOT COVERED BY THE UNIT WARRANTY.

I NOTICE!

IN COMPLIANCE WITH RECOGNIZED CODES, IT IS RECOMMENDED THAT AN AUXILIARY DRAIN PAN BE INSTALLED UNDER ALL EVAPORATOR COILS OR UNITS CONTAINING EVAPORATOR COILS THAT ARE LOCATED IN ANY AREA OF A STRUCTURE WHERE DAMAGE TO THE BUILDING OR BUILDING CONTENTS MAY OCCUR AS A RESULT OF AN OVERFLOW OF IN THE COIL DRAIN PAN OR A STOPPAGE IN THE PRIMARY CONDENSATE DRAIN PIPING. SEE ACCESSORIES SECTION OF THESE INSTRUCTIONS FOR AUXILIARY HORIZONTAL OVERFLOW PAN INFORMATION (MODEL RXBM).

OHIO Weatherization Training Center

ZDGAA056BDTA

S001212444

A Category I forced air furnace for installation in manufactured (Mobile Home) or building constructed on-site or recreational vehicle.

Catégorie I générateur d'air chaud à air forcé installer à l'intérieur maison préfabriquée/bâtiment construit sur place/véhicules récréatifs.

Model No. N° de Modéle	Serial No. N° de Serie
DGAA056BDTA	001212444

BTU/Hr. Input - Entrée BTU/H	BTU/Hr. Output - Sortie BTU
56000	45000

Equipped for use with
Equipée pour êntre utilisée avec: Natural

For natural gas when equipped with no. drill size orifice.
Gaz naturel, si l'orifice est identique au trou d'un forêt n°.: #29

Sizing of Category I Venting Systems

Ohio Weatherization Training Center

Appliance Categories

Category I
Negative Pressure Vent
Non-Condensing

May use draft hood or may be fan assisted

Pressure in flue pipe is negative Flue gas is carried outside by natural convection.

Category II
Negative Pressure Vent
Condensing

Technology not currently available

Category III
Positive Pressure Vent
Non-Condensing

Fan assisted designs only. Pressure in flue pipe is positive. Flue gas is forced outside under pressure

Category IV
Positive Pressure Vent
Condensing

Fan assisted designs only. Pressure in flue pipe is positive. Flue gas is forced outside under pressure

OHIO Weatherization Training Center

Vent Connector Diameter Maximum (Inches)	Vent Connector Maximum Horizontal Length (Feet)
3"	4 1/2'
4"	6'
5"	7 1/2'
6"	9'
7"	10 1/2'
8"	12'
9"	13 1/2"
10"	15'
12"	18'
14"	21'
16"	24'
18"	27'
20"	30'
22"	33'
24"	36'

OHIO Weatherization Training Center

VENT SIZING

NFPA 54
CHAPTER XIII

REDUCTION ITEMS:

Elbows 13.1.3

You are allowed (2) two 90 degree elbows per heating unit. Every 90 after that will require a 10% reduction.

You are allowed (4) four 45 degree elbows per heating unit. Every 45 after that will require a 5% reduction.

Corrugated Chimney Liners 13.1.7

You must allow a 20% reduction for a (CMCL) whenever it is used in a masonry chimney. * You DO NOT count the 90 degree if it is made using a (CMCL) at the bottom of the run.

Vent Connector Manifolds 13.2.4

Where (2) heating units are combined together using a manifold you must take a 10% reduction for each manifold.

Vent Connector Maximum Length 13.2.2

You shall use Table 13.2.2 to determine how much reduction is required when the horizontal length exceeds the maximum length allowed. For each increment in length you must take a 10% reduction ONLY on the heating unit using that vent. * Maximum total horizontal length requirements are located in codes 12.11.9.2 & 12.11.9.3 located on page 92

Vertical Vent Usizing/7 X Rule 13.1.9

The flow area of the vertical vent shall not exceed seven times the flow area of the listed appliance categorized vent area, flue collar, or draft hood outlet area unless designed in accordance with approved engineering methods. * See codes 13.1.10 through 13.1.17 located on page 101

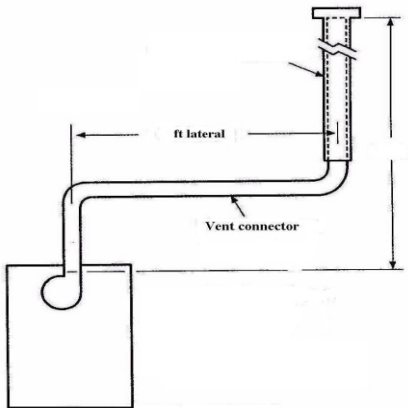

Vent Height	Vent Material	BTU/HR	Appliance Type
15 ft.	**B-vent**	**75,000**	**Nat**

Connector Lateral	Vent Connector Material
5 ft.	**Single-wall**

Results:

Vent Size	Vent Material

Connector Size	Connector Material

Table used:

OHIO Weatherization Training Center

		Vent Diameter								
		3”			4”			5”		
		Appliance Rating in Thousands of BTU’s per hour								
Height (ft)	Length (ft)	Fan Min	Fan Max	NAT Max	Fan Min	Fan Max	NAT Max	Fan Min	Fan Max	NAT Max
6	0	0	78	46	0	152	86	0	251	141
	2	13	51	36	18	97	67	27	157	105
	4	21	49	34	30	94	64	39	153	103
	6	25	46	32	36	91	61	47	149	100
8	0	0	84	50	0	165	94	0	276	155
	2	12	57	40	16	109	75	25	178	120
	5	23	53	38	32	103	71	42	171	115
	8	28	49	35	39	98	66	51	164	109
15	0	0	88	53	0	175	100	0	295	165
	2	12	61	42	17	118	81	23	194	129
	5	23	57	40	32	113	77	41	187	124
	10	30	51	36	49	104	70	54	176	115
	15	0	94	58	0	191	112	0	327	187
	2	11	69	48	15	136	93		226	150
	5	22	65	45	30	130	87		219	142
	10	29	59	41	40	121	82	51	206	135
	15	35	53	37	48	112	76	61	195	128
20	0	0	97	61	0	202	119	0	349	202
	2	10	75	51	14	149	100	18	250	166
	5	21	71	48	29	143	96	38	242	160
	10	28	64	44	38	133	89	50	229	150
	15	34	58	40	46	124	84	59	217	142
	20	48	52	35	55	116	78	69	206	134

OHIO Weatherization Training Center

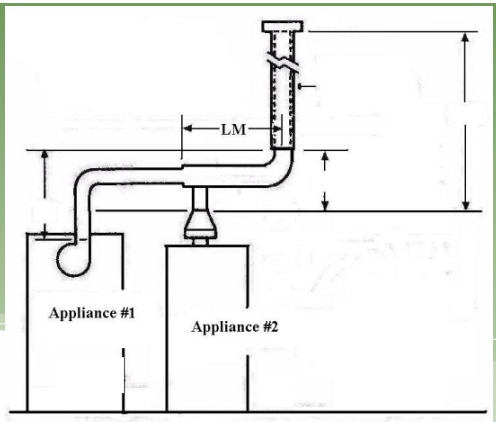

	#1	#2
	40,000	**70,000**

	#1	#2
r	**Single wall**	**Single wall**
n,		

	#1	#2
r	**2 ft.**	**3 ft.**
:	**Yes**	

	#1	#2
Type of Appliance:	**Draft hood equipped**	**Draft hood equipped**

	Type	Height
Common Vent	**B-vent**	**15 ft.**

	Reductions in vent capacity
CMCL	
Elbows	
Manifold	
Other	

	Size	Type
e #1	_____	_____
e #2	_____	_____
Vent	_____	_____

Table used:

OHIO Weatherization Training Center

		3”			4”			5”		
		Appliance Rating in Thousands of BTU’s per hour								
Vent Height (ft)	Connector Rise (ft)	Fan Min	Fan Max	NAT Max	Fan Min	Fan Max	NAT Max	Fan Min	Fan Max	NAT Max
6	1	22	37	26	35	66	46	46	106	72
	2	23	41	31	37	75	55	48	121	86
	3	24	44	35	38	81	62	49	132	96
8		22	40	27	35	72	48	49	114	76
		23	44	32	36	80	57	51	128	90
		24	47	36	37	87	64	53	139	101
10		22	43	28	34	78	50	49	123	78
		23	47	33	36	86	59	51	136	93
		24	50	37	37	92	67	52	146	104
15		21	50	30	33	89	53	[illegible]	[illegible]	83
	2	22	53	35	35	96	63	[illegible]	[illegible]	99
	3	24	55	40	36	102	71	51	163	111
20	1	21	54	31	33	99	[illegible]	46	157	87
	2	22	57	37	34	105	[illegible]	48	167	104
	3	23	60	42	35	110	[illegible]	50	176	116
30	1	20	62	33	31	113	[illegible]	45	181	93
	2	21	64	39	33	118	[illegible]	47	190	110
	3	22	66	44	34	123	[illegible]	48	198	124

	Type B Double-Wall Common Vent Diameter –D (in)								
	4”			5”			6”		
Vent Height (ft)	Fan (+)Fan	Fan (+)NAT	NAT (+) Nat	Fan (+)Fan	Fan (+)NAT	[illegible]	Fan (+)Fan	Fan (+)NAT	NAT (+) Nat
6	92	81	65	140	116	[illegible]	204	161	147
8	101	90	73	155	129	[illegible]	224	178	163
10	110	97	79	169	141	124	243	194	178
15	125	112	91	195	164	144	283	228	206
20	136	123	102	215	183	160	314	255	229
30	152	138	118	244	210	185	261	297	266

Weatherization Training Center

OHIO
Weatherization
Training Center

Proper location for the proper appliance. Don't make it mad.

OHIO Weatherization Training Center