2016

NATIONAL HOUSING TRUST FUND ALLOCATION PLAN

OHIO HOUSING FINANCE AGENCY

Office of Planning, Preservation and Development | **July 29, 2016**

OHIO HOUSING FINANCE AGENCY

Contents

1. Introduction 3
1.1. NHTF Overview 3
1.2. Ohio's NHTF Planning Process 3
1.3. Ohio Consolidated Plan Housing Needs 4
2. Distribution of Funds 5
2.1. Description of Distribution of Funds 5
2.2. Eligible Activities 6
2.3. Maximum Per-Unit Development Subsidy 7
2.4. First Time Homebuyer 7
2.5. Eligible Applicants 7
3. Application Requirements 8
3.1. Threshold Requirements 8
3.2. Competitive Requirements 9
3.3. Tie Breakers 10
3.3.1. Submission Instructions 10
3.3.2. Contract Execution & Draws 10
4. Performance Goals & Benchmarks 10

1. Introduction

1.1. NHTF Overview

The National Housing Trust Fund (NHTF) was established by Title I of the Housing and Economic Recovery Act of 2008 (HERA), Section 1131 (Public Law 110-289) to increase and preserve rental housing as well as increase homeownership for very low- and extremely low-income families, including those experiencing homelessness, through formula grants to states. HERA authorized Fannie Mae and Freddie Mac (the GSE's) to set aside 4.2 basis points of unpaid principal purchases. 65 percent of those set asides are dedicated to the National Housing Trust Fund while the remaining 35 percent is reserved for the Capital Magnet Fund. Contributions to the NHTF were originally scheduled to begin in FY2010 but suspended following the GSE's conservatorship. In December 2014, the GSEs were instructed to set aside NHTF funds beginning in FY2015.

HERA did not make the labor standards of Davis-Bacon applicable to the NHTF and the U.S. Department of Housing and Urban Development (HUD) did not require Davis-Bacon labor standards in the NHTF Final Rule. The Affirmatively Furthering Fair Housing requirements applicable to HUD funding recipients and all fair housing laws do apply to NHTF activities, including HUD's April 4, 2016, guidance regarding the Use of Criminal Records by Providers of Housing and Real Estate-Related Transactions.

On February 8, 2016, Governor Kasich sent a designation letter to HUD Secretary Julian Castro identifying the Ohio Development Services Agency (ODSA) as Ohio's NHTF administrator and the Ohio Housing Finance Agency (OHFA) as the allocating entity. Ohio will not subgrant any NHTF funds. In May 2016, HUD published the Housing Trust Fund Allocation Notice, making $3,740,578.00 available to Ohio. The State is required to submit an annual National Housing Trust Fund Allocation Plan; this document serves that purpose.

1.2. Ohio's NHTF Planning Process

OHFA hosted a NHTF Public Forum on February 25, 2016, to discuss implementing Ohio's expected allocation. The forum was attended by federal, state, and local agencies; advocacy organizations; and members of the development community. Following the Public Forum, OHFA posted an online, open invitation encouraging interested parties to attend three Advisory Group Work Sessions. Held between March and May 2016, these sessions identified and refined the following public objectives for the NHTF: achieving lower rents in Housing Tax Credit properties, allocating dollars to support non-Housing Tax Credit multifamily developments, and preserving existing affordable housing through the leveraging of 4 percent Housing Tax Credits. The Advisory Group did not recommend preferences or limitations to a particular segment of extremely- or very-low income households.

With this information, OHFA submitted a draft Allocation Plan for posting to ODSA's website commencing the formal comment period on June 24, 2016. A public forum on the draft Allocation Plan was held on June 21, 2016, and a public hearing was held on June 26, 2016. In response to the feedback received through these public comment opportunities, this final Allocation Plan was completed and submitted to HUD for approval on or around August 5, 2016.

Note that all NHTF activities must adhere to the requirements of 24 CFR Part 93; to any extent this Allocation Plan conflicts with that Interim Rule, the Rule shall govern. These guidelines may be subject to change pending developments in federal and state legislative requirements and/or OHFA policy. All awards are contingent upon the availability of funds to OHFA.

Questions concerning the NHTF should be directed to:

Ohio Housing Finance Agency
Office of Planning, Preservation & Development, 4th Floor
57 East Main Street
Columbus, Ohio 43215
NHTFAllocation@ohiohome.org
http://ohiohome.org/ppd/housingtrust.aspx

1.3. Ohio Consolidated Plan Housing Needs

As a formula block grant, NHTF allocations must be made in accordance with Ohio's Consolidated Plan (ConPlan). ODSA, through a public input process, develops the five-year ConPlan to identify affordable housing and community development needs and implements a framework to address those needs.

As articulated in the ConPlan, the goal of OHFA's Housing Development Assistance Program (HDAP) is "to support the capacity of housing development organizations and to provide financing for eligible housing developments to expand the supply of decent, safe, affordable housing for very low-income to moderate-income persons and households in the state of Ohio." HDAP and, through it, NHTF complement and advance the following policy objectives identified in the Program Year 2015-2019 ConPlan:

1. **Homeless and Supportive Housing**. Provide a continuum of housing/services to prevent persons from becoming homeless and rapidly re-housing persons when homelessness does occur.
2. **Housing Preservation and Accessibility**. Provide funding for a flexible, community-wide approach to preserving and making accessible affordable owner and rental housing for low- and moderate-income households by bring the housing unit up to program standards and codes, eliminating hazards and deficiencies in major systems, and reducing maintenance cost.

3. **Creating New Affordable Housing Opportunities**. Provide funding for a flexible, community-wide approach to creating new affordable housing opportunities for low- and moderate-income persons.
4. **Supportive Housing/Fair Housing**. Provide supportive housing services to assist lower-income households with acquiring or maintaining housing.

Also See: 24 CFR §91.101

2. Distribution of Funds

2.1. Description of Distribution of Funds

Ohio was allocated $3,740,578 in the 2016 funding cycle. As permitted by the Interim Rule, up to $374,058 will be used to offset administrative costs. All programmatic funds will be distributed through OHFA's existing Housing Development Assistance Program. Subject to applicant demand and qualification, OHFA anticipates the following subcategories of NHTF assistance will be issued through HDAP:

- $2,000,000.00 Bond Gap Financing (BGF).
- $1,366,520.20 Housing Development Gap Financing (HDGF).

Applicants must meet all eligibility criteria for an HDAP award through the Ohio Housing Trust Fund (OHTF) or HOME program; however, applicants are not required to obtain OHTF or HOME funding in order to qualify for a NHTF award. OHTF/HOME HDAP sections of the application will be scored before NHTF.

HDAP funds are awarded on a competitive basis. Final awards are based upon project need. It is OHFA's intention that NHTF funds will be used to expand the overall number of housing units available to the Extremely Low Income (ELI) population and to prevent supplantation of existing resources that are already creating ELI units. Therefore, OHFA reserves the right to reject any application that does not appear to contribute to increasing the number of ELI units.

Due to the limited availability of funds, NHTF will be limited to one award per developer and one award per county in the 2016 funding cycle, unless no feasible alternatives exist. Applicants may apply for the following maximum NHTF award amounts:

- BGF: $500,000 *or* $750,000 if not also seeking OHTF/HOME funds.
- HDGF: $750,000

Awarded funds are structured as a deferred loan with payment due on sale. The mandatory rental affordability period and the loan term are 30 years. The interest rate is 0.00%.

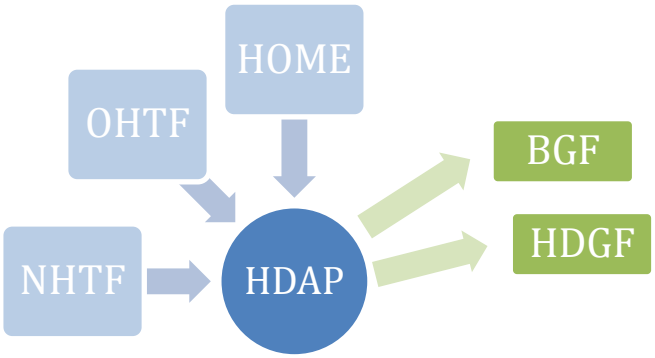

If there are insufficient qualifying applications to commit the full NHTF award through BGF or HDGF, any remaining funds will be distributed through the Housing Credit Gap Financing program.

All HDAP funds, including those utilizing NHTF, must receive approval from the OHFA Board.

Also See: §91.220(5)(B), §93.200

2.2. Eligible Activities

NHTF funds may be used for the production, preservation, and rehabilitation of affordable rental housing. This specifically includes real property acquisition, site improvements, conversion, demolition, financing costs, and relocation expenses of any displaced persons. NHTF funds may only be used for public housing in limited circumstances. See 24 CFR §93.203 for further information.

Due to the limited amount of funding available in the 2016 funding cycle, Ohio's NHTF funds are not available for operating subsidies or to refinance existing debt secured to rental housing units.

All NHTF activities must meet minimum standards as set forth in the HDAP Consolidated Program Guidelines, the Multifamily Program Guide, and the Multifamily Underwriting Guidelines. Awardees must adhere to the standards set forth in OHFA's Uniform Relocation Documents to minimize displacement of residents during rehabilitation activities.

Minimum rehabilitation standards are governed by the Housing Rehabilitation Handbook Part II as issued by ODSA. This guide includes standards for:

- Health and safety;
- Major systems;
- Lead-Based Paint;
- Accessibility;
- Disaster Mitigation;
- State and local Codes, Ordinances, and Zoning Requirements; and

- Inspectable Areas and Observable Deficiencies from HUD's Uniform Physical Condition Standards identified by HUD as applicable to NHTF-assisted housing.

Rental housing owners may limit tenants or give a preference in accordance with 24 CFR §93.303(d)(3) only to the extent such a preference complies with all fair housing requirements and is described in the ConPlan.

Also See: §91.220(5)(B-H), §93.200, §93.320(k)(5), §91.301

2.3. Maximum Per-Unit Development Subsidy

NHTF may not be used in connection with luxury housing. NHTF expenditures must be reasonable and based on actual costs. The maximum per unit development subsidy shall be the same as the HOME maximum per unit subsidy limit as determined by HUD in the applicable program year. See §221(d)3 – 234 for further information.

Also See: §91.300, §93.320(k)(5)

2.4. First Time Homebuyer

Ohio does not intend to use any NHTF funds for homebuyer activities in the 2016 funding cycle. As such, there are no applicable resale, recapture, or affordability provisions related to homebuyer activities.

§91.220(5)(E-F), §93.320(5)(v-vi), §93.304(f), §93.305

2.5. Eligible Applicants

Eligible applicants include private for-profit housing developers, not-for-profit 501(c)(3) and 501(c)(4) organizations, and public housing authorities. Additional eligibility criteria are set forth in the HDAP Consolidated Program Guidelines and incorporated herein. Applicants must qualify for a HDAP award using Ohio Housing Trust Fund resources or HOME funds to qualify for HDAP funding through NHTF.

Applicants must demonstrate sufficient experience and capacity to:

- own, construct, rehabilitate, manage, and operate affordable multifamily rental housing;
- undertake, comply, and manage eligible NHTF activity; and
- manage other programs that may be used in conjunction with NHTF funds including, but not limited to, HDAP.

Applicants must make acceptable assurances that it will comply with the requirements of the NHTF program during the entire program period.

3. Application Requirements

3.1. Threshold Requirements

Applicants must submit a qualifying HDAP application and meet all requirements of that program. Refer to the HDAP Consolidated Program Guidelines for further information.

Applicants must complete a NHTF Supplemental Application. The Supplemental Application will collect the following mandatory information; failure to respond to or satisfy these threshold requirements will result in removal from NHTF consideration.

a. Experience and Capacity
b. Project Feasibility
c. Statement describing developer's ability to obligate and implement in a timely manner
d. Statement describing how the project meets state housing needs
e. Statement describing if/how NHTF units will be integrated with higher income units
f. Statement describing potential for resident success
g. Statement describing method for achieving affordability
h. Statement describing tenant recruitment and selection process
i. Certification of Compliance with all NHTF requirements

In no case shall rent plus utilities on any NHTF-assisted unit(s) exceed 30 percent of Area Median Income (AMI). In addition to other HDAP affordability requirements[1], NHTF funded projects must also commit to providing affordable rents to extremely low income households. Above OHTF/HOME requirements, the greater of the following must also be provided to qualify for a NHTF award:

- 10 percent of affordable units will be rent restricted at 30 percent of 30 percent AMI
- 5 units will be rent restricted at 30 percent of 30 percent AMI

All NHTF rent restrictions must be reflected in the Gap Financing Application. OHFA encourages all attempts to reduce rents below the 30 percent of AMI minimum requirements. If an applicant does not qualify, or is not selected for NHTF funding, OHFA will reevaluate the budget for HDAP funding through OHTF/HOME with or without the additional NHTF rent restrictions and applicants may amend the budget accordingly at the final application.

Recipients of NHTF funds must consider mitigating criteria in deciding whether to select any tenant in the development, including but not limited to regarding the following circumstances:

1. Tenant-applicants lacking proof of employment and/or income at three or more times the monthly cost of rent;

[1] All HDAP developments must commit to one of the following selections, based on the location of the proposed project: (A) HUD Participating Jurisdiction: A minimum of 40 percent of the affordable units must be affordable to households with incomes at or below 50 percent of AMI (B) Non-HUD Participating Jurisdiction: A minimum of 35 percent of the affordable units must be affordable to households with incomes at or below 50 percent of AMI

2. Tenant-applicants with no credit history; and
3. Tenant-applicants with an eviction history.

Also See: §91.220(5)(B), §93.250, §93.302(b)(1)(i), §93.320(5)

3.2. Competitive Requirements

In addition to threshold criteria, the NHTF Supplemental Application will collect the following competitive scoring information. Points for each criterion will be awarded at the discretion of OHFA. Applications with the highest scores will be selected for funding. For applications including multiple or scattered sites, all sites must meet competitive criteria to earn points.

Category	Points	Point Breakdown
Rent Affordability in Addition to Minimum Requirements	30	30 Pts – Additional 10% units affordable at or below 30% AMI 20 Pts – Additional 5% units affordable at or below 30% AMI
Geographic Diversity[2]	30	30 Pts – Opportunity Index Rating "Very High" 20 Pts – Opportunity Index Rating "High" 10 Pts – Opportunity Index Rating "Moderate"
Affordability Leveraging	20	20 Pts – Commitment of one of the following subsidies on 100% of NHTF-assisted units: ▪ Section 8 or Rural Development Rent Subsidy ▪ New Units with 811 Rent Subsidy ▪ Other local, state, or federal subsidy as determined by OHFA that limits tenant rental contribution to 30% of gross household income 15 Pts – Commitment of one of the above subsidies on at least 50% of total units in the development 10 Pts – Commitment of one of the above subsidies on at least 25% of total units in the development
Local Leveraging	10	5 Pts – >50% Financing is from non-federal[3] sources 5 Pts – Project does not request OHTF/HOME HDAP
Duration of Affordability Period	10	10 Pts – Budget demonstrates positive or breakeven cash flow through year 30

Also See: §91.220(5)(A), §93.320(5)(i)

[2] This geographic distribution priority is consistent with Ohio's ConPlan and the certification that Ohio will affirmatively further fair housing. The Opportunity Mapping Tool and additional information is available on OHFA's website at https://ohiohome.org/ppd/opportunitymap.aspx.

[3] Non-Federal Funding Sources include but are not limited to equity, OHTF, private debt, Federal Home Loan Bank's Affordable Housing Program, foundations, In-kind donations, tax abatements, and other state and local resources.

3.3. Tie Breakers

In the event of a tie score, the following waterfall of creative and innovative elements or increased affordability standards tiebreakers will determine funding priority:

1. Developments seeking Ohio 811 Project Rental Assistance Program rental subsidy
2. Developments that receive the most points under the Geographic Diversity category
3. Developments with the most units affordable at or below 30 percent AMI
4. Developments offering units with 3+ bedrooms that are affordable at or below 30 percent AMI

Also See: §91.220(5)(A), §93.320(5)(i)

3.3.1. Submission Instructions

Submissions will flow through the HDAP program. All applicants must submit a complete HDAP application and a NHTF Supplemental Application. Please see the HDAP Consolidated Program Guidelines for full application instructions.

3.3.2. Contract Execution & Draws

All recipients of NHTF must execute an agreement, as drafted by OHFA, that meets the requirements of 24 CFR §93.404. A Guide to Drawing the HDAP was created to assist applicants as they work with OHFA staff during the construction phase.

4. Performance Goals & Benchmarks

OHFA expects that in the first year, NHTF will support six new or preserved housing developments and will create at least 30 units with rents that do not exceed 30 percent of 30 percent AMI and are therefore affordable to extremely low income families. Recipients of NHTF funds will be responsible for compliance with applicable reporting, file and physical inspections, and record keeping requirements described in guidance published on the OHFA Office of Program Compliance website.

Also See: §93.320(k)(5)(iii), §91.220(5)(C)

ATTACHMENTS

OHIO HOUSING FINANCE AGENCY

HOUSING DEVELOPMENT ASSISTANCE PROGRAMS

2016 CONSOLIDATED PROGRAM GUIDELINES

Housing Development Gap Financing Program ***Bond Gap Financing Program***

web www.ohiohome.org | **tollfree** 888.362.6432

The Ohio Housing Finance Agency is an Equal Opportunity Housing entity. Loans are available on a fair and equal basis regardless of race, color, religion, sex, familial status, national origin, military status, disability or ancestry. Please visit www.ohiohome.org for more information.

General Information

The Housing Development Assistance Program (HDAP) provides financing to support the preservation or construction of affordable housing for low-income persons and households in the State of Ohio. On an annual basis, the Ohio Housing Finance Agency (OHFA) releases the Ohio Housing Needs Assessment providing data on housing occupancy, quality and affordability examining the housing needs among low- and moderate-income households and populations with special or underserved needs. Priority housing needs identified in the most current Ohio Housing Needs Assessment and reflected in the 2016 Housing Development Assistance Program guidelines include:

- Creating new affordable rental housing opportunities for low and moderate income households that include a range of housing choices in markets throughout the state;
- Promoting housing opportunities for populations with special and underserved needs, including older adults, personal with disabilities, veterans and the homeless;
- Improving neighborhoods through community and economic development;
- Preserving existing affordable housing properties, including units with federal subsidies; and
- Advancing livability standards to promote a healthy environment for residents.

These guidelines may be subject to change, pending developments in federal and state legislative requirements and/or OHFA policy. All funds awarded through HDAP are contingent upon the availability of funds to OHFA.

Questions concerning HDAP should be directed to the Office of Planning, Preservation and Development via mail, telephone or by email:

Ohio Housing Finance Agency
Office of Planning, Preservation and Development
57 East Main Street
Columbus, Ohio 43215

Karen Banyai, Operations Manager	kbanyai@ohiohome.org	614.752.4185
Kathy Berry, Analyst	kberry@ohiohome.org	614.995.1208
Virgie Vaido, Analyst	vvaido@ohiohome.org	614.995.4511

Available Resources

The following resources are used to provide financial assistance to eligible projects. Funds may be awarded in the form of a grant or loan.

HOME Investment Partnerships Funds: Federal regulations relating to environmental review, federal wage rates, federal accessibility, federal acquisition and relocation laws [URA and Section 104(d)], long-term affordability, etc. apply. Applicants receiving an award of HOME dollars are subject to approval from the OHFA Board. Funding levels are subject to appropriation of funds by the U.S. Department of Housing and Urban Development (HUD) and approval of the State Consolidated Plan.

Ohio Housing Trust Fund (OHTF): The Ohio Housing Trust Fund provides funding to HDAP projects predominantly serving low- to moderate-income households with incomes at or below 50 percent of the area's median income. The OHTF gives preference to those projects that benefit households with incomes at or below 35 percent of the area median income for the county in which the project is located, as established by the U.S. Department of Housing and Urban Development (HUD). Applicants receiving an award of OHTF dollars may be subject to State of Ohio Prevailing Wage Rate rules. The amount and use of OHTF dollars are subject to appropriation, per project approval from the State Controlling Board and approval from the OHFA Board.

Fee Schedule:

Proposal and Pre-Application Fees	
Bond Gap Financing Proposal Application Fee	$1000
Housing Development Gap Financing Pre-Application Fee	$500 for the first submission $200 for any subsequent submissions
Final Application Fees	
Bond Gap Financing Final Application Fee	$2000
Housing Development Gap Financing Final Application Fee	$500
Amendments to a funding agreement	$500 per request
Extensions of a funding agreement	$500 per extension
Compliance Monitoring Fees	
Housing Tax Credit Compliance Monitoring Fee	$900 per unit

Funding Commitments and Closing an HDAP Loan

OHFA will enter into a Funding Agreement with the HDAP recipient and Limited Partnership. Once the Funding Agreement has been signed by all appropriate parties, the HDAP recipient may formally request a closing of the HDAP.

A template-closing checklist and closing procedures are available on the OHFA website. The template checklist does not include any project-specific closing conditions determined during the underwriting process. Project-specific closing conditions will be detailed in the Funding Agreement.

OHFA requires a minimum of 30 days to complete its review once all of the required checklist items have been received.

Subsequent Changes

The HDAP recipient is required to notify OHFA immediately and request approval of any changes that occur in the project at any time after project approval through the affordability period. Such changes include, but are not limited to, changes in the development team (developer, general contractor, sales agent/management entity, etc.); changes in the number of units or unit mix; changes to the target population; etc.

The request should be sent to:

Ohio Housing Finance Agency
Office of Planning, Preservation and Development
57 East Main St., 4th Floor
Columbus, OH 43215

Project Administration and Drawing HDAP

A Guide to Drawing the HDAP has been created to assist applicants as they work with OHFA staff during the construction phase. This document may be found on the Project Administration Page of the OHFA website.

Post Award Reporting Requirements

Construction Monitoring

The owner and/or developer is required to submit quarterly summary reports detailing progress with construction or rehabilitation projects to the assigned OHFA Project Administration analyst. The primary purpose of submitting quarterly summary reports is to monitor the progress of developments financed with assistance from OHFA and to ensure that all agreements between OHFA and the developer/owner are met. OHFA shall be notified and receive copies of any change orders prior to execution or other documentation altering the approved design, contract work scope and/or completion date.

The quarterly summary report of construction activities must verify the construction start date, the current percentage of completion, and provide an estimated completion or placed-in-service date as outlined in the OHFA Construction Monitoring Quarterly Report form. At OHFA's discretion, photographic evidence of construction activities may be requested in more frequent intervals to assure quality of work and site safety.

For projects awarded under the Housing Development Gap Financing program, OHFA reserves the right to require construction monitoring reports provided by a qualified third party inspector, including an architect or professional with experience in construction management.

Compliance Monitoring

Housing Tax Credit Developments

The monitoring process established for housing tax credit developments determines if a property is complying with requirements of the Internal Revenue Code (IRC). The housing tax credit monitoring process is further outlined in IRC Section 42, IRS Regulation 1.42-5, the most Qualified Allocation Plan, and other OHFA policies.

Compliance with the requirements of the IRC is the sole responsibility of the owner of the building for which the housing tax credit was allocated.

Housing Tax Credit projects are required to comply with the following, in addition to other requirements described in guidance published on the OHFA Office of Program Compliance website.

1. All residents must be income qualified, adjusted for family size, prior to moving into the unit. Units must be rent restricted as provided for in the IRC. All units allocated housing tax credits must be safe, decent and sanitary housing units complying with local building, health, safety, and zoning codes.
2. Before placing the project in service, the owner/agent must schedule a "placed-in-service meeting" with the OHFA Program Compliance Analyst assigned to the project to discuss the lease up of the tax credit project. This meeting must be scheduled within six but no less than three months prior to the placed-in-service date. OHFA will attempt to combine placed in service meetings when an owner/agent is placing several projects into service within the same general time period. OHFA may elect to waive this requirement.
3. At least six months prior to the placed-in-service date, the owner/agent individual(s) responsible for final approval of resident files or the site manager/leasing consultant who processes the Tenant Income Certifications for buildings receiving 8609 Forms will be required to attend the OHFA Tax Credit Compliance Training. Compliance trainings offered by other organizations (e.g. Quadel Consulting) will not be acceptable to OHFA. Additionally, once the project is placed-in-service and has received form 8609s, a representative of the owner and/or management company must attend the OHFA Tax Credit Compliance Training every two years.
4. Within 15 days of placing the last building in service, the project owner must forward a letter to the OHFA Program Compliance Analyst assigned to the project indicating the date on which the last building was placed-in-service. Based on this communication, the project will be preliminarily scheduled for a lease-up monitoring visit.

5. The owner of a housing tax credit development must keep records for each qualified low-income building in the project for each year of the compliance and extended use period. These records must include but are not limited to the following for each building in the project:
    a. The total number of residential rental units in the building (including the number of bedrooms and the size in square feet of each residential rental unit);
    b. The percentage of residential rental units in the building that are low-income units;
    c. The rent charged on each residential rental unit in the building (including any utility allowances);
    d. The number of occupants in each low-income unit;
    e. The unit vacancies in the building and information showing when, and to whom, the next available units were rented;
    f. The annual income certification of each low-income resident per unit (if applicable);
    g. Annual student status certification;
    h. Demographic information;
    i. Documentation to support each low-income resident's income certification. Resident income is calculated in a manner consistent with the determination of annual income under Section 8 of the United States Housing Act of 1937 ("Section 8"), not in accordance with the determination of gross income for federal income tax liability;
    j. The eligible basis and qualified basis of the building at the end of each year of the credit period, compliance and extended use periods; and
    k. The character and use of the non-residential portion of the building included in the building's eligible basis under IRC Section 42(d).
6. The owner of a housing tax credit development is required to retain the records described in Item 5 above for the entire period of extended use.
7. The owner is responsible for reporting to OHFA annually through the DevCo online system. The reporting process currently requires the submission of an Annual Owner Certification and resident and project data using the XML upload or housing credit software (e.g. Yardi) as well as other reports and certifications necessary to evidence compliance with any gap financing provided through an OHFA program. New projects or those in lease-up phase must submit an Annual Owner Certification if one or more residents were income qualified during the reporting year. If a property was sold at any time during a reporting year, the owner/property management company that was in place as of 12/31 of the reporting year is responsible for completing and submitting the Annual Owner Certification and tenant data for that reporting year.

    When completing the owner certification, the owner is certifying that, for the preceding 12-month period, the owner met the following requirements:
    a. The 20-50 test under IRC Section 42(g)(1)(A), or the 40-60 test under section 42(g)(1)(B), whichever minimum set-aside test was applicable to the project; and if applicable to the project, the 15-40 test under sections 42(g)(4) and 142(d)(4)(B) for "deep rent skewed" projects;
    b. There was no change in the applicable fraction (as defined in section 42(c)(1)(B)) of any building in the project, or that there was a change, accompanied by a description of the change;
    c. The owner has received an annual income certification from each low-income resident, as appropriate, and documentation to support that certification; or, in the case of a resident receiving Section 8 housing assistance payments, the statement from a public housing authority described in paragraph (b)(1)(vii) of this section;
    d. Each low-income unit in the project was rent-restricted under Section 42(g)(2);

e. All units in the project were for use by the general public and used on a non-transitional basis (except for transitional housing for the homeless provided under Section 42 [i][3][B][iii]);

f. Pursuant to requirements under Treasury Regulation 1.42-5, the buildings and low-income units were suitable for occupancy, taking into account local health, safety, and building codes, and the State or local government unit responsible for making local health, safety, or building code inspections did not issue a violation report for any building or low-income unit in the project. If a violation report or notice was issued by the governmental unit, attach a statement summarizing the violation report or notice or a copy of the violation report or notice to the annual certification and state whether the violation has been corrected;

g. There was no change in the eligible basis (as defined in Section 42[d]) for any building in the development, or if there was a change, the nature of the change (e.g. a common area has become commercial space, or a fee is now charged for a resident facility formerly provided without charge);

h. All resident facilities included in the eligible basis under Section 42(d) of any building in the project, such as swimming pools, other recreational facilities, and parking areas, were provided on a comparable basis without charge to all residents in the building;

i. If a low-income unit in the project became vacant during the year, that reasonable attempts were or are being made to rent that unit or the next available unit of comparable or smaller size to residents having a qualifying income before any units in the project were or will be rented to residents not having a qualifying income;

j. If the income of residents of a low-income unit in the project increased above the limit allowed in Section 42(g)(2)(D)(ii), the next available unit of comparable or smaller size in the building was or will be rented to residents having a qualifying income;

k. The owner has not refused to lease a unit in the project to a Section 8 applicant because the applicant holds a Section 8 voucher or certificate;

l. No finding of discrimination under the Fair Housing Act has occurred for the project (a finding of discrimination includes an adverse final decision by HUD, an adverse final decision by a substantially equivalent state or local fair housing agency, or an adverse judgment from a Federal court);

m. For the preceding 12-month period, no residents in low-income units were evicted or had their tenancies terminated other than for good cause and no gross rents were increased other than permitted under Section 42; and

n. An extended low-income housing commitment as described in Section 42(h)(6) was in effect. OHFA reserves the right to adjust the above requirements according to changes in federal regulations.

8. OHFA requires that the owner of a housing tax credit development annually certify the residents' incomes and assets using the form(s) specified by the OHFA Office of Program Compliance. Projects that are 100 percent occupied by qualified low-income households may discontinue recertifications as described in Section 42 of the Internal Revenue Code.

9. The OHFA Office of Program Compliance will review resident files and conduct physical inspections of the buildings, common areas and units throughout the 15-year compliance period and Extended Use Period. OHFA has the right to perform on-site inspections of any low-income housing project through the end of the Extended Use Period. Buildings receiving new allocations of credits will be inspected no later than the end of the second calendar year following the year the last building in the project is placed-in-service. Some of the factors that determine the frequency and the number of units and buildings inspected include the type of funding in the property, whether the property is in Extended Use, whether the property is on OHFA's Watch List, changes in ownership or management company, scores compiled through an internal Risk Assessment, systemic non-compliance issues from past inspections, and resident complaints. Properties may be inspected every year or some may have inspections every three years. Pursuant to Treasury Regulation 1.42-5(c)(2)(ii)(B), at least once every three years, OHFA will conduct on-site inspections of all

buildings in the project, and for at least 20 percent of the project's low-income units, OHFA will inspect the units and review the low-income certifications, the documentation supporting the certifications and the rent records for the tenants in those units.

10. The owner/property management company will receive written notice of the inspection generally 30 days prior to the date of the inspection. The owner/property management company is responsible for ensuring all requested pre-inspection documentation (e.g. current rent roll) is submitted no later than 10 days from the date of the OHFA's notice of the scheduled review. Owners/property management companies that fail to timely submit the requested pre-inspection information may be subject to placement on OHFA's Multifamily Watch List and/or in not in good partnership status unless an extenuating circumstance prohibits the timely submission. OHFA will provide prompt written notice to the owner (generally 15 business days after the inspection) of the inspection findings. If the project is found not in-compliance. The owner will have up to 60 days from the date of the notification to correct any non-compliance issues found and give a written response to OHFA of corrective actions taken. OHFA may, with good cause, extend the correction period for up to six months.

    a. During the correction period, an owner must correct any non-compliance and provide evidence to OHFA of such corrections.

11. When instances of non-compliance are identified, OHFA is required to file form 8823, Low-Income Housing Tax Credit Agencies Report of Non-Compliance with the IRS no later than 45 days after the end of the correction period, and no earlier than the end of the correction period, whether or not the non-compliance is corrected. Form 8823 will be issued in accordance with the Uniform Physical Condition Standards (UPCS) even if the physical non-compliance is corrected on the date of the inspection or the end of the correction period. OHFA must explain on Form 8823 the nature of the non-compliance or failure to certify (reference 26 CFR Par. 2. 1.42-5 [e][3]). In addition to notifying the IRS of non-compliance, OHFA may place the project on its Multifamily Watch List or consider the owner or manager not in good partnership with OHFA programs.

12. Compliance with the requirements of Section 42 of the IRC is the responsibility of the owner of the building(s) for which the tax credit is claimed. OHFA's obligation to monitor for compliance does not make OHFA liable for owner/agent non-compliance.

13. If OHFA is unable to serve notice on the property owner by mail and/or telephone during the compliance and extended use periods as defined by the IRS, OHFA will consider the property out-of-compliance and will notify the IRS by filing Form 8823, or take other appropriate action such as designating the project and its owner/agent as not in good partnership with the Agency. Please note that OHFA will maintain one contact person per project. The owner/agent will agree upon the contact person and notify OHFA immediately of any change.

14. OHFA requires housing tax credit owners to pay a one-time compliance monitoring fee. The fee amount for projects receiving a reservation will be $900 per unit.

15. OHFA reserves the right to charge the owner and/or management company for costs incurred as the result of compliance reviews conducted outside of the normal inspection cycle.

16. It is the responsibility of the owner and its agents to ensure that the property management agent has all documents and information necessary to meet all rent, income or other requirements attached to all sources of funding used to develop the project. Such documents may include, but are not limited to, the Housing Tax Credit restrictive covenant(s), HDAP funding agreement, or other gap financing agreements.

17. Compliance requirements are communicated to owners and managers of housing tax credit developments through the OHFA web site, training sessions, email updates and other means such as the Agency newsletter. Owners and managers are expected to consult these and other resources to ensure they are up-to-date regarding policies and procedures established by OHFA.

18. Changes in owner and/or management companies that occur after a development has placed-in-service must be approved by the OHFA Office of Program Compliance. The owner must request approval from the Office of Program Compliance by written request to the assigned compliance analyst no later than 60 days prior to terminating the services of the current management company or sale of the property. Owners will be required to submit the request in accordance with OHFA's Ownership and Management Company Change Policy, to be made available on the OHFA website.

    To ensure the proposed company or owner is sufficiently qualified to manage and/or operate a housing tax credit development in Ohio and in accordance with applicable state and federal requirements, a representative of the proposed management company must submit evidence of an active Ohio Brokers License in accordance with 4735.022 of the Ohio Revised Code, where applicable. Any request for consideration of a management company who does not meet this requirement will be denied. Owners who fail to provide 60-day notice of an owner or management company change may further be subject to a fine of $500 and removal from a position of good partnership.

Housing Development Gap Financing

The recipient of the Housing Development Gap Financing funds will be responsible for compliance with applicable reporting, file and physical inspections, and record keeping requirements described in guidance published on the OHFA Office of Program Compliance website. Owners of properties financed solely with Ohio Housing Trust Funds must submit the Annual Owner Certification and tenant data in accordance with the most current policies of the Agency.

Program Calendars

Bond Gap Financing Program		Housing Development Gap Financing Program	
Date	**Event**	**Date**	**Event**
Application Round I:		**Application Round I:**	
TBD	Application materials available on the OHFA website	TBD	Application materials available on the OHFA website
June 3, 2016	Exception requests due to OHFA by 5:00 p.m., close of standard business hours	June 1-23, 2016	June proposal applications accepted, due to OHFA by 5:00 p.m., close of standard business hours
July 1, 2016	Proposal applications due to OHFA by 5:00 p.m., close of standard business hours	June 30, 2016	Announcement of June applicants selected to submit a final application
July 18-29, 2016	Release of preliminary competitive scores	July 3-21, 2016	July proposal applications accepted, due to OHFA by 5:00 p.m., close of standard business hours
August 12, 2016	Announcement of Round I Bond Gap Financing Awards	July 31, 2016	Announcement of July applicants selected to submit a final application
TBD	Next steps meetings begin at OHFA's request	August 1-18, 2016	August proposal applications accepted, due to OHFA by 5:00 p.m., close of standard business hours
November 22, 2016	Final applications due to OHFA by 5:00 p.m., close of standard business hours	August 31, 2016	Announcement of August applicants selected to submit a final application
Application Round II (Existing Units Only):		**Application Round II:**	
January 3, 2017	Announcement of funding availability for Round II	December 4-15, 2016	December proposal applications accepted, due to OHFA by 5:00 p.m., close of standard business
February 3, 2017	Exception requests due to OHFA by 5:00 p.m., close of standard business hours	December 22, 2016	Announcement of December applicants selected to submit a final application
March 1, 2017	Final applications due to OHFA by 5:00 p.m., close of standard business hours	March 3, 2017	Last day to submit a final Housing Development Gap Financing application to OHFA
April 3, 2017	Announcement of Round II Bond Gap Financing Awards		
TBD	Next steps meetings begin at OHFA's request		

Proposal and Pre-Application Requirements

	Applicable Programs	
Proposal or Pre-Application Requirements	**Bond Gap Financing**	**Housing Development Gap Financing**
Proposal or Pre-application Fee Applicants to the Bond Gap Financing program must submit a proposal fee of $1000. Applicants to the Housing Development Gap Financing program must submit a pre-application fee of $500 for the first submission and $200 for any subsequent submission.	✓	✓
Program Certification An original signature of a representative of each general partner/managing member is required in the program certification section of the application and must be submitted in its original, paper form.	✓	✓
Proposal Summary The proposal application will include a summary containing basic information about each development proposed for consideration of a competitive award of housing tax credits. The summary will be completed by the applicant in the format specified in the AHFA and submitted as a pdf. Proposal summaries will be posted on the OHFA website for public review and comment no later than the date indicated in the program calendar.	✓	✓
Complete Gap Financing Application Applicants to the HDGF program must submit the required Gap Financing Application (GFA) and proper evidence for all threshold criteria specified by the deadline indicated in the program calendar. Late and/or incomplete submittals will not be considered.		✓
Development Team Resumes The application must include resumes for any members of the development team. OHFA defines the development team as key staff members of the general partnership, developer, management company and any consultants.	✓	✓
Organizational Chart The application will include an organizational chart that: 1. shows the structure of the ownership entity and the relationships and ranks of all relevant positions. 2. Shows the structure of each organization in the ownership entity as well as the developer	✓	✓
Audited Financial Statements The applicant must provide Audited Financials for the entity applying to be the HDAP recipient.	✓	✓
Management Company Capacity Review Management companies with no prior experience with an OHFA property will be evaluated by the OHFA Office of Program Compliance according to the information contained in the complete Management Capacity Review Survey submitted at application.	✓	✓
Exception Requests Any request for an exception to specific program requirements referenced in the HDAP guidelines must be submitted in advance of the proposal application (BGF) or with the pre-application (HDGF) and by the date shown in the program calendar. Exceptions will be considered only for those items specifically allowed under these program guidelines and represented in the OHFA exception request form.	✓	✓
Site Control If the current owner is a general partner or limited partner in the development, the proposal application will include copies of the executed and recorded deed(s) at the time of application. If the current owner is not a general partner or limited partner in the development, then evidence of site control must be submitted. Acceptable forms of site control include, but are not limited to, a purchase contract, a purchase option or a lease option for a minimum term of 35 years. If parcels will be acquired from a city land bank, a copy of the final city council resolution approving the transfer of all applicable sites may be submitted as evidence of site control; a copy of a city resolution or city council ordinance approving the legal description and transfer of all applicable sites will also be accepted. If parcels will be acquired from a county land bank, a letter from the board of control or a designated official approving the transfer of all applicable sites may be submitted as evidence of site control. With respect to option agreements, the proposal application must include evidence of the agreement to purchase the property within a specified time period. Evidence of site control may not expire until a reasonable period following the scheduled announcement date for housing tax credit awards. OHFA reserves the right to require, as needed, additional documentation that evidences proper site control.	✓	✓

Zoning The application will include evidence that all sites are currently zoned for the proposed use in the form of a valid building permit or a letter from the local municipality stating that the current zoning will permit the proposed development. This requirement will be waived for projects involving new construction provided an exception request is submitted by the deadline for receipt of exception requests. A complete exception request will provide information regarding the process and timeline for obtaining the appropriate local approvals. In all cases, zoning will be required at final application. For jurisdictions with no zoning regulations in effect, a letter from the jurisdiction stating so is required. Evidence must be dated within one year of the proposal application due date.	✓	✓
Green Standards OHFA requires that all developments involving new construction and financed with Agency resources meet green building standards outlined in the 2015 Enterprise Green Communities Criteria and successfully achieve program certification for the proposed development. Applicants may substitute Leadership in Energy & Environmental Design (LEED) Certification by the U.S. Green Building Council or ICC 700 National Green Building Standards (NGBS) by Home Innovation Research Labs (formerly the NAHB Research Center) to meet this requirement. Applicants must include a written statement indicating which certification and level they are seeking at proposal application. Developments will be notified of deficiencies to green standards at the time of notification for other threshold deficiencies. If awarded an allocation of HDAP, developments seeking Enterprise Green Communities certification must enroll the development for prebuild approval in the Enterprise Green Communities portal prior to final application and submit prebuild approval with final application. Enterprise Green Communities requires 30 days to review and approve projects. If seeking LEED certification, the certification checklist must be submitted with the final application to evidence that certification will be achieved. If seeking NGBS certification, the preliminary scoring spreadsheet and proof of enrollment, including a unique project identification number, must be submitted with the final application to evidence that certification will be achieved. Evidence of final certification with Enterprise Green Communities, LEED or NGBS will be required upon completion of construction, where applicable.	✓	✓
Market Information For projects involving any new construction, the proposal application will include a market study conducted by an OHFA-approved market study professional updated or approved within 12 months of the application submission date. Applicants should refer to the OHFA Market Study Standards for additional requirements, and to the program calendar for applicable deadlines. BGF Only: Projects limited to rehabilitation of existing units will submit a market study conducted by an OHFA-approved market study professional at final application. At proposal application the applicant will certify that the occupancy of the proposed development has averaged at least 93 percent over the prior three years. HDGF Only: Developments serving populations defined in the Interagency Council on Homelessness and Affordable Housing Permanent Supportive Housing Policy Framework or that include less than 15 units are exempt from this requirement and may submit evidence of any waiting lists or an assessment of housing needs in place of a market study. If the applicant is choosing to submit an assessment of housing needs, the assessment provided must describe the housing needs of low-income individuals in the area to be served by the proposed development. This assessment will be submitted as a narrative and should identify the following: 1. A map of the site and the surrounding area, including the street address of the project and amenities within one mile of the proposed project. 2. A list of each census tract or parts thereof which comprise the area that the proposed project will serve. 3. The total population for all census tracts and data showing demographic, household and neighborhood characteristics over the past three years. The applicant should address any factors impacting observed trend(s). 4. The age, population and/or income targets for the proposed project, including the number of income-qualified renters in the area that the proposed project will serve. 5. The name and address of all subsidized housing developments within the area that the proposed project will serve, including current occupancy levels and a number of persons on any waiting lists. 6. The availability of affordable rental housing options for the target population. Describe the age, condition, etc., of housing, and the extent of vacant, foreclosed and abandoned housing and other buildings within the area. If possible, identify any substandard housing also in the area the proposed project will serve. 7. List rents for comparable market rate properties within the area the proposed project will serve. Do not use subsidized developments. A minimum of three comparables should be submitted.	✓	✓

Rent Rolls (Existing Units Only) The application will include rent rolls demonstrating the occupancy of any existing units and/or buildings for the past two years. OHFA may accept rent summary with prior approval.	✓	✓
Site Visit Folder The application will include a pocket folder containing a detailed map clearly depicting the physical location of the site and all roads leading to the site, contact information for all members of the development team, a copy of the proposal summary and a site plan showing all building elevations. OHFA will conduct a site review for all proposals to evaluate and determine the suitability of a prospective site for housing development. If a prospective site is deemed unsuitable based on the site review, the application will be removed from further consideration.	✓	✓
Supportive Services Plan Developments receiving an allocation of HDAP are required to provide service coordination to the resident population and/or linkages to information and resources appropriate to the population. The application will include evidence of salaried or in-kind service coordination on-site, contiguous or accessible to the development at the time of application. The application must also include a Supportive Services Plan that addresses methods to: a. Assess the needs of residents and develop a plan for service delivery; b. Provide residents with information and referrals to state, federal and local resources; and c. monitor and evaluate service delivery and outcomes. Permanent Supportive Housing developments may include a plan submitted to the local Continuum of Care or Department of Housing and Urban Development (HUD).	✓	✓
Utility Allowance Information The application will include utility allowance information consistent with the requirements of Section 42 of the IRC, IRS Regulation 1.42-10 and OHFA's Utility Allowance Policy. Applicants may refer to the OHFA Utility Allowance policy for guidance on methods available to calculate utility allowances for various project types.	✓	✓
Complete Affordable Housing Funding Application (AHFA) The AHFA and all supporting documents will be submitted on a compact disc, organized and formatted according to the index specified in the AHFA.	✓	
Appraisal (New Construction Only) The application will include an as-is appraisal for all development site(s) represented in the application. Appraisals must meet OHFA's standards and requirements as outlined in the most current policies.	✓	
Capital Needs Assessment and Scope of Work Applications for the rehabilitation of existing housing units and adaptive reuse of buildings not originally constructed as housing must submit a Capital Needs Assessment and Scope of Work for all buildings represented in the proposal. The assessment must conform to the standards outlined in the OHFA Capital Needs Assessment Standards. OHFA will use this assessment to determine whether the costs indicated in the proposal application are appropriate to the level of rehabilitation required.	✓	
Design and Construction Features Agreement The application must include a Design and Construction Features Agreement. A copy of the Design and Construction Features Agreement must be submitted as an attachment to preliminary plans. The Design and Construction Features Agreement will be made available on the OHFA website.	✓	
Extended Use Agreement All housing tax credit developments must commit to an extended use period of a minimum of 30 years of affordability at the time of application. If an allocation of housing tax credits is awarded, the owner must file a Restrictive Covenant (provided by OHFA) which waives the right of the owner to petition OHFA to have the extended use period terminated (as described in Section 42 of the IRC).	✓	
Multifamily Bond Financing Information The application will include a letter detailing the bond financing structure and the underwriter's commitment and terms as well as a calendar outlining anticipated actions and responsible parties for closing the transaction.	✓	
Preliminary Architectural Plans The application will include preliminary architectural plans meeting all requirements outlined in the Design Requirements section of the allocation plan. All preliminary architectural plans will be reviewed for approval by OHFA's staff architect.	✓	

Public Notification The proposal application will include evidence that the public notification process for local elected officials was completed. The applicant must notify, in writing, certain officials from: a. The political jurisdictions in which the development will be located; and b. Any political jurisdiction whose boundaries are located within one-half mile radius of the development's location. The officials to be notified include: a. The chief executive officer and the clerk of the legislative body for any city or village (i.e. mayor and clerk of council); b. The clerk of the board of trustees for any township; c. The clerk of the board of commissioners for any county; d. State Representative(s); e. State Senator(s). The applicant will use the OHFA letter template and include all information requested. The notification must state the applicant's intent to develop housing using OHFA funding. The notification must be in writing and sent via certified mail, return receipt requested. Submit a copy of the stamped post office receipt (return receipt not required) for certified mail and copies of notification letters with your proposal application. Scattered-site developments must complete the public notification process for all sites represented in the proposal application. If awarded an allocation of housing tax credits, this requirement must be completed again for all sites represented in the final application prior to construction completion. Applicants are encouraged to contact the appropriate local government officials prior to submitting an application to inform these parties of details concerning the housing proposal.	✓	
Related Party Transaction Questionnaire The application will include the Related Party Transaction Questionnaire for any transactions between related parties.	✓	
Scoring Workbook The application will include a complete Scoring Workbook, in the format specified by OHFA. Proposal applications that do not include a Scoring Workbook at the time of application cannot be scored.	✓	

Final Application Requirements

FINAL APPLICATION REQUIREMENTS	Applicable Programs	
	Bond Gap Financing	Housing Development Gap Financing
Final Application Fee Applicants to the Bond Gap Financing program must submit a final application fee of $2000. Applicants to the Housing Development Gap Financing program must submit a final application fee of $500.	✓	✓
Program Certification An original signature of a representative of each general partner/managing member is required in the program certification section of the application and must be submitted in its original, paper form	✓	✓
Complete Affordable Housing Funding Application (AHFA)/Gap Financing Application (GFA) The AHFA/GFA and all supporting documents will be submitted on a compact disc, organized and formatted according to the index specified in the Applications.	✓	✓
Changes from Proposal/Pre-Application Any substantive changes made to the development represented in the proposal or pre-application must be disclosed to OHFA with submission of the final application. Substantive changes may include, but are not limited to, changes in ownership or development team, design, construction or configuration, site(s) (with an exception for scattered- site developments), targeted populations including special needs populations, and any items affecting competitive scoring. Such changes may be permitted only at the discretion of the Director of Planning, Preservation and Development.	✓	✓
Affirmative Fair Housing Marketing Plan The application will include an Affirmative Fair Housing Marketing Plan consistent with the most current policies of the OHFA Office of Program Compliance. Applicants that own a property with project based Section 8, HUD Section 236 or USDA contracts may submit a current and approved Affirmative Fair Housing Marketing Plan to satisfy the requirement. If the plan's current approval date is within six (6) months of expiration, the applicant must submit the current plan with supporting documentation demonstrating that an updated plan needs or does not need renewal by HUD, USDA and OHFA. If an approved plan is not already in place, the final application will include a complete an Affirmative Fair Housing Marketing Plan and OHFA Form PC-E45, consistent with the most current policies of the OHFA Office of Program Compliance. The form will include a description of the outreach, marketing and advertising methods used to affirmatively market the development. A separate plan is required for each census tract in which the development is located. HUD, USDA and the OHFA Office of Program Compliance require that the Affirmative Fair Housing Marketing Plan be reviewed every five (5) years. Applicants may contact the OHFA Office of Program Compliance with questions regarding the Affirmative Fair Housing Marketing Plan.	✓	✓
Conditional Financial Commitments All non-OHFA sources of debt and equity, including any project-based rental subsidies, must be evidenced by a conditional commitment letter or acceptable documentation in lieu of a commitment at final application. Any debt or grant funds that will be a part of the development's financing must have a conditional commitment letter indicating the following: 1. Loan or grant amount. 2. Loan term and amortization. 3. Interest rate. 4. Fees associated with the loan or grant. 5. Reserve requirements. 6. Lien position of the loan. 7. Acknowledgement by the lender or allocating entity that the project seeking financial support has received at least a preliminary review and meets the requirements of the lender or funders, conditional upon a final underwrite. If a loan or grant has been applied for or will be applied for from a competitive source (e.g., city HOME funds, Federal Home Loan Bank), the required letter (see items 1-7 above) must acknowledge funds have been applied for or verify that a funding round is approaching. The letter should detail the amount of funds requested and the timing for funding decisions. Applicants must identify an alternative plan to fill the funding gap if unsuccessful in any non-OHFA competitive funding program. If an existing loan will be assumed or restructured, provide supporting documentation detailing the terms and conditions of any assumed or restructured debt, including the current outstanding balance.	✓	✓

Appraisal For BGF projects that include rehabilitation and HDGF, the application will include an as-is appraisal for all development site(s) represented in the application. Appraisals must conform to OHFA's appraisal standards and requirements.	✓	✓
Phase I Environmental Assessment The application will include a Phase I ESA for all sites included in the development. If a full Phase I ESA was submitted with the proposal application, one need not be resubmitted with the final application. The report(s) must comply with current OHFA standards. The owner must submit a narrative that addresses any issues raised in the report(s). OHFA reserves the right to reject any sites indicated to have environmental problems or hazards. The Phase I ESA must have been completed or updated by the author within one (1) year prior to the application deadline for housing tax credits.	✓	✓
Relocation Plan and Forms (Existing Rental Units Only) Any development involving acquisition and rehabilitation of existing and occupied units that will result in permanent displacement of any residents will submit a complete Acquisition, Relocation and Demolition Questionnaire and Relocation Assistance Plan forms at final application. If a development will result in resident relocation during the construction period, the final application will include a narrative detailing the tenant relocation plan or strategy. The narrative will address the method(s) for relocating residents, provide a breakdown of any associated costs, and identify if tenants will be permanently displaced.	✓	✓
Authorization to Release Tax Information The application must include the Authorization to Release Tax Information Form for all members of the general or limited partnership. OHFA will use this information to determine if an organization with an ownership interest in the development has outstanding tax liens with the State of Ohio.	✓	✓
Federal Tax Identification Number The application will include evidence that a Federal Tax Identification Number (FTIN) has been obtained for the ownership entity.	✓	✓
Board Resolution Authorizing Application for Housing Development Assistance Program Resources	✓	✓
Non-Profit Articles of Incorporation, Including evidence of 501(c)3 or (c)4 Status	✓	✓
Audited Financial Statements (Existing Units Only) The application will include audited financial statements for the project.	✓	✓
Community Outreach Plan and Documentation The application will include a community outreach plan describing a planned strategy for providing notification to residents, businesses, local elected officials, police and fire departments, community development corporations, non-profit community organizations and other community stakeholders of the proposed housing development. The planned strategy should involve posting of notices in libraries or other public spaces where residents or potential residents may frequent. Public meetings, design charrettes and notices in local papers and/or social media are more acceptable methods to provide notice to the community. The application will include documentation and evidence that the planned outreach strategy has been completed prior to submission of the application. The applicant will provide copies of written notices placed or published, materials, including any sign-in sheets from any public meetings, and support or opposition letters from community groups or contacts established through the outreach process. Note: If the community outreach strategy was planned and carried out prior to submission of the proposal application, the applicant must conduct an additional public meeting between proposal and final application and provide evidence that this meeting occurred at final application.	✓	✓

Public Notification The proposal application will include evidence that the public notification process for local elected officials was completed. The applicant must notify, in writing, certain officials from: a. The political jurisdictions in which the development will be located; and b. Any political jurisdiction whose boundaries are located within one-half mile radius of the development's location. The officials to be notified include: a. The chief executive officer and the clerk of the legislative body for any city or village (i.e. mayor and clerk of council); b. The clerk of the board of trustees for any township; c. The clerk of the board of commissioners for any county; d. State Representative(s); e. State Senator(s). The applicant will use the OHFA letter template and include all information requested. The notification must state the applicant's intent to develop housing using OHFA funding. The notification must be in writing and sent via certified mail, return receipt requested. Submit a copy of the stamped post office receipt (return receipt not required) for certified mail and copies of notification letters with your proposal application. Scattered-site developments must complete the public notification process for all sites represented in the proposal application. If awarded an allocation of housing tax credits, this requirement must be completed again for all sites represented in the final application prior to construction completion. Applicants are encouraged to contact the appropriate local government officials prior to submitting an application to inform these parties of details concerning the housing proposal.		✓
Capital Needs Assessment and Scope of Work Applications for the rehabilitation of existing housing units and adaptive reuse of buildings not originally constructed as housing must submit a Capital Needs Assessment and Scope of Work for all buildings represented in the proposal. The assessment must conform to the standards outlined in the OHFA Capital Needs Assessment Standards. OHFA will use this assessment to determine whether the costs indicated in the proposal application are appropriate to the level of rehabilitation required.		✓
Eighty Percent Plans and Specifications The application will include one set of 11x17 drawings including Civil, Landscape, Architectural, Mechanical, Electrical and Plumbing specifications. Plans must be certified by the development architect to be 80 percent complete or better, and meet all requirements outlined in the Design Requirements section of these guidelines or the Qualified Allocation Plan (for applicants seeking housing credits). All architectural plans will be reviewed for approval by OHFA's staff architect.	✓	✓
Design and Construction Features Agreement The application must include a fully executed Design and Construction Features Agreement. A copy of the Design and Construction Features Agreement must be submitted as an attachment to 80 percent plans. The Design and Construction Features Agreement will be made available on the OHFA website.	✓	✓
Notification to Statewide Accessibility Groups (New Units Only) Applicants proposing new construction must notify the applicable statewide accessibility group prior to final application that accessible housing is being proposed. Applicants must further agree to accept referrals for prospective residents, and consider design recommendations for the property. Copies of correspondence between the applicant and accessibility group will be submitted to show compliance with the foregoing requirements. A list of statewide accessibility groups will be made available on the OHFA website.	✓	✓
Third Party Cost Estimate ***Itemized*** cost estimates from an ***unrelated third party*** are required to substantiate the construction costs in the development budget. To be an unrelated third party, there can be no identity of interest between the organization providing the qualified cost estimates and any organization with an ownership interest, including the developer, the general contractor, any member of the development team, their subsidiaries or affiliates (the project architect may submit the estimate). Estimates must also indicate the status of the design process (i.e. preliminary drawings, working drawings with outline specifications, full-scale drawings and specifications, etc.). The ***unrelated third party*** must indicate which standards/codes were used in developing the cost estimates. The ***unrelated third party*** must submit a signed statement certifying that the cost estimates for any rehabilitation work being done are sufficient to meet the Ohio Department of Development's Residential Rehab Standards (RRS). If any member of the development team or ownership has an identity of interest with the entity providing the qualified cost estimate, the identity of interest relationship must be disclosed.	✓	✓

Green Standards Evidence from Enterprise Green Communities of approval to proceed. Final Enterprise Green Communities Certification, LEED or NGBS will be required upon completion of any project involving new construction.	✓	✓
Good Cause Lease Addendum The application will include a written statement from the owner certifying that the Good Cause Lease Addendum will be included in all new leases and upon renewal of existing leases for all residents. The Good Cause Lease Addendum will be made available on the OHFA website. Developments that will include project-based rental assistance from a federal agency are exempt from this requirement.	✓	✓
Legal Description(s) The application will include a legal description of each parcel that will be included in the development must be submitted at application in Word format. The description(s) must include the street address and permanent parcel number of each parcel.	✓	✓
Ohio Housing Locator The application will include a written statement from the owner certifying that developments financed with assistance from OHFA will be listed with the Ohio Housing Locator, as soon as the units are placed in service. It will be the responsibility of the owner and/or property manager to update listings at least on an annual basis.	✓	✓
Market Study For BGF projects involving rehabilitation, the final application will include a market study conducted by an OHFA-approved market study professional updated or approved within 12 months of the application submission date. Applicants should refer to the OHFA Market Study Standards for additional requirements, and to the program calendar for applicable deadlines.	✓	
Subsidy Layering Review Information If a Public Housing Authority requests that OHFA complete a Subsidy Layering Review (SLR) for a development including new project-based vouchers or a Housing Assistance Payment Contract, the final application for housing tax credits will include all necessary application materials, documents and fees required for an SLR, submitted on a separate disk. Applicants may refer to the OHFA SLR guidelines and Federal Register Notices Vol. 70 No. 187, and Vol. 75 No. 131 for additional guidance.	Where Applicable	

Bond Gap Financing Program Guidelines

The Bond Gap Financing program provides financing assistance to developments utilizing multifamily bonds in conjunction with non-competitive (4%) housing tax credits to carry out moderate-scale rehabilitation or to construct new affordable housing serving low- and moderate-income households.

Approximately $5-8 million in Ohio Housing Trust Fund (OHTF) dollars will be made available through two funding rounds in the 2016 program year to support successful Bond Gap Financing developments.

Developments assisted through the Bond Gap Financing program are subject to the requirements of the Housing Tax Credit program, as established in Section 42 of the Internal Revenue Code (IRC), and further specified in the most current Qualified Allocation Plan, Multifamily Bond program guidelines, and underwriting policies of the Agency.

For developments involving rehabilitation of existing units, applicants will be further required to meet the Residential Rehabilitation Standards maintained by the Office of Community Development at the Ohio Development Services Agency. The proposed scope of work will also be evaluated to determine that an adequate amount of rehabilitation is being completed to ensure the projects' expected useful life of 30 years.

To comply with all applicable requirements, OHFA recommends that applicant consult the following related documents for their proper interpretation:

- 2016-2017 Qualified Allocation Plan
- 2016-2017 Multifamily Underwriting Guidelines
- Multifamily Bond Program Guidelines (OHFA –issued bonds only)
- Housing Development Loan Program Guidelines
- Multifamily Lending Program Guidelines
- Residential Rehabilitation Standards – Office of Community Development, Ohio Development Services Agency
- Market Study Standards
- Capital Needs Assessment Standards and Effective Useful Life Schedule
- 2016 Appraisal Requirements

Funding Limits

OHFA will provide funding up to a maximum of $1 million per project. Unless otherwise noted or approved by staff, developers and owners will be limited to one award per program year. Developers and applicants who have successful worked with OHFA in utilizing the 4% credits and HDAP may be receive more than one award of HDAP, but the total award to any one developer/applicant may not exceed $1 million.

Additional Rent Limits

All developments will commit to one of the following selections, based on the location of the proposed project:

- HUD Participating Jurisdiction: A minimum of 40 percent of the affordable units must be affordable to households with incomes at or below 50 percent of the area median income (AMI)
- Non-HUD Participating Jurisdiction: A minimum of 35 percent of the affordable units must be affordable to households with incomes at or below 50 percent of AMI

Eligible Uses of Bond Gap Financing

HDAP resources may only be applied in the development budget toward non-related party acquisition, hard costs associated with new construction or rehabilitation, and developer fees associated with the proposed development. If market rate housing and/or commercial spaces are involved in the proposed development, costs associated with creating the market rate housing and/or commercial spaces cannot be paid using HDAP funds. Development budget line items that can be paid for using HDAP funds include:

- Acquisition of land and/or building(s) (from unrelated parties only);
- Demolition (not applicable for Preservation projects);
- On-site improvements;
- Construction and/or renovation costs including construction fee items, construction contingency, and contractor overhead and profit (excluding costs associated with construction of commercial property);
- Furnishings and appliances;
- Architectural and engineering fees;
- Developer fees, including consultant fees and any construction management fees paid to the developer; or
- Legal fees.

Other development budget expenses must be covered by sources of financing other than HDAP.

NOTE: OHFA may, on a case-by-case basis, allow for HDAP funds, to be used to reimburse the applicant/project for land and/or buildings purchased prior to the execution of the HDAP funding agreement. The applicant should work with OHFA prior to submission of their application to discuss possible use of HDAP to reimburse acquisition costs. Projects awarded HOME funds may not use the award to reimburse the applicant/project for acquisition costs.

Bond Gap Financing cannot be used to assist projects that:

- Rehab projects that show a total development cost per unit of $130,000 or more, excluding assumed unrelated debt (existing units only). OHFA will allow exceptions to this requirement for projects requiring a more significant level of rehab but will require that the development achieve Enterprise Green Communities certification or a minimum equivalent (LEED or NGBS Silver).
    - OHFA reserves the right to evaluate the total development cost per unit for appropriateness on projects involving new construction.
- Have received a previous award of HDAP resources, without OHFA's prior approval;
- Involve new construction or rehabilitation of Single-Room Occupancy (SRO) housing;
- Must be licensed to allow for residents to occupy the development;
- Local zoning codes define the unit(s) proposed to be developed as a group home;
- Are identified as hospitals, nursing homes, sanitariums, life care facilities, retirement homes (if providing significant services other than housing are mandatory for residents), employer housing, mobile homes and student housing.

Eligible Applicants

Eligible applicants will include private for-profit housing developers, not-for-profit 501(c)(3) and 501(c)(4) organizations, and public housing authorities proposing to create new affordable rental housing opportunities, or preserve existing affordable housing. Applicants, including the sponsoring organization and its members, must have experience with housing tax credit development and have placed in service at least one housing tax credit development. Exceptions may be considered by OHFA on a case-by-case basis.

Regardless of the funding source, to be eligible for funding, religious organizations and their subsidiaries/affiliates must meet the provisions in 24 CFR Part 92.257.

In the Bond Gap Financing program, OHFA is especially interested in partnering with developers and owners with experience in successfully completing 4 percent housing tax credits, multifamily bond and Ohio Housing Trust Fund developments and/or demonstrate an ability to proceed in a timeframe consistent with the requirements of applicable federal and state regulations.

Entities receiving an award of HDAP funds must act as the majority/controlling partner, sole owner, or a general partner/managing member during the entire construction phase. OHFA must approve any changes to the HDAP-recipient (applicant) after the construction phase.

Ineligible Applicants

Ineligible applicants will include local governments and new developers and owners who have not placed in service at least one housing tax credit development in any state.

Developers/owners with an HDAP project that is under construction and have been awarded an extension of their funding agreement, or any applicant submitting a project that has a prior HDAP award may not apply for another HDAP award without prior approval from OHFA. Developers/applicants must provide compelling reasons why OHFA should award funds under these circumstances.

Awards

HDAP awards are structured as 30 year loans. Interest rates can vary up to two percent repayments are based on the projects ability to cash flow. OHFA will consider grants only to projects with non-profits ownership entities (100 percent general partner/managing members). Applicants may request a grant but the final determination will be made by OHFA.

Bond Gap Financing Program Application Review Process

1. Exceptions to Program Requirements

Requests for exceptions to program requirements may be considered on a limited basis by OHFA. Applicants seeking a waiver from program requirements will submit the Exception Request Form and supporting documentation by the deadline shown in the program calendar. The Exception Request form is available on the OHFA website and must be submitted via email to ExceptionsPPD@ohiohome.org. OHFA will review all requests and issue decisions within two weeks of the proposal application deadline.

2. Proposal Application Submission

All proposal applications for the 2016 Bond Gap Financing Program must be submitted to the Ohio Housing Finance Agency no later than 5:00pm on the dates listed in the program calendar. OHFA will assess a non-refundable fee in the amount of $1000 for the proposal application. Fees must be submitted with the proposal application.

3. Competitive Review

Upon receipt of all proposal applications, each will be assigned to an Analyst who is responsible for the application review. The competitive review process for Bond Gap Financing proposal applications involves the evaluation of all aspects of a project, including without limitation, market quality, affordability, impact on the targeted populations or surrounding community and the experience and capacity of the applicant. The applicant will be notified of any questions arising as a result of the review process and given two weeks to clarify these issues from the date of notification. All proposals, without exception, must score a minimum of 50 points for consideration of an award.

4. Preliminary Financial Analysis

All proposal applications will be reviewed for financial feasibility in accordance with the most current underwriting guidelines of the Agency. The amount of funding requested will be evaluated to determine the minimum amount of funds necessary to complete the actual development of the proposed project, considering all other committed sources. The applicant will be notified of any deficiencies during the review process and given two weeks to correct these issues from the date of notification.

5. Threshold Review

The assigned Analyst will finally complete a full threshold review of the application for all projects that are competitive and considered for an award of Bond Gap Financing. The threshold review assures that projects comply with applicable requirements and demonstrate an ability to proceed. Applications that do not meet threshold requirements will have two weeks following notification of any deficiencies to correct these issues. If deficiencies are not resolved in this timeframe, the project will be removed from any further consideration.

6. Pre-Award Site Visit

OHFA may conduct a site review to evaluate and determine the suitability of a prospective site for the proposed use. If a site is deemed unsuitable based on the site review, the application will be removed from further consideration.

Up to two representatives of the applicant who are familiar with the proposal application are encouraged to accompany OHFA staff to answer any questions. Applicants for scattered-site developments must be available to provide a tour of the sites and surrounding areas. All site visits will be scheduled at a time convenient to OHFA review staff.

For projects involving rehabilitation of existing units, OHFA staff will be required to visit individual units for the purpose of evaluating the current physical condition of a property. At least one representative of the applicant must participate. Any necessary tenant notifications should be issued prior to the site visit.

7. Announcement of Bond Gap Financing Awards Round I

Once competitive, underwriting and threshold reviews are complete; OHFA will announce award recipients on its website. Successful applicants will also be notified by phone and/or in writing. At this time, the applicant may schedule a meeting with the assigned Analyst and Operations Manager to discuss and plan 'next steps' prior to submitting the final application.

8. Final Application Submission

A final and complete application will be submitted by the deadline shown in the program calendar including all supporting documentation and attachments. Any changes made to the project after the announcement of awards must be approved by OHFA prior to submitting the final application. OHFA reserves the right to remove any applications that are incomplete or inconsistent from further consideration. OHFA will assess a non-refundable fee in the amount of $2000 for the final application. Fees must be included with the application. If, after the final application has been received, subsequent substantive changes require submission of a new AHFA, OHFA reserves the right to assess an additional application fee in the amount of $2000.

9. Announcement of Funding Availability for Round II

On or before January 3, 2017, OHFA will issue a funding opportunity announcement for any resources to be made available in a second round of Bond Gap Financing. Applicants should refer to these guidelines and/or any amendments to these guidelines in submitting an application in a second round.

10. Application Submission

All applications to the second round of the Bond Gap Financing Program will be considered final and must be submitted to the Ohio Housing Finance Agency no later than 5:00 p.m. on the dates listed in the program calendar. OHFA will assess a non-refundable fee in the amount of $3,000 for such applications. Fees must be included with the application.

OHFA defines an application in the second round of Bond Gap Financing as one that is complete, including all supporting documentation required for both the proposal and final application stages. Applicants may refer to the chart of proposal and final application requirements for further guidance. If, after the final application has been received, subsequent substantive changes require submission of a new AHFA, OHFA reserves the right to assess an additional application fee in the amount of $2000.

11. Competitive Review

Upon receipt of all applications, each will be assigned to an Analyst who is responsible for the application review. The competitive review process for Bond Gap Financing applications involves the evaluation of all aspects of a project, including without limitation, market quality, affordability, impact on the targeted populations or surrounding community and the experience and capacity of the applicant. The applicant will be notified of any questions arising as a result of the review process and given two weeks to clarify these issues from the date of notification. All proposals must score a minimum of 50 points for consideration of an award.

12. Preliminary Financial Analysis

All applications will be reviewed for financial feasibility in accordance with the most current underwriting guidelines of the Agency. The amount of funding requested will be evaluated to determine the minimum amount of funds necessary to complete the actual development of the proposed project, considering all other committed sources. There will be no cure period for any significant deficiencies including but not limited to negative cash flow, financing gaps, or budgets that do not accurately reflect the scope of the proposed rehabilitation

13. Threshold Review

The assigned Analyst will finally complete a full threshold review of the application for all projects that are competitive and considered for an award of Bond Gap Financing. The threshold review assures that projects comply with applicable requirements and demonstrate an ability to proceed. Final applications competing in the second round of Bond Gap Financing that do not meet threshold requirements will be removed from further consideration. There will be no cure period for any

observed deficiencies including without limitation, missing or substantially incomplete information related to site control, zoning, public notification requirements, any third party reports or assessments, or conditional financial commitments.

14. Pre-Award Site Visit

OHFA may conduct a site review to evaluate and determine the suitability of a prospective site for the proposed use. If a site is deemed unsuitable based on the site review, the application will be removed from further consideration.

Up to two representatives of the applicant who are familiar with the proposal application are encouraged to accompany OHFA staff to answer any questions. Applicants for scattered-site developments must be available to provide a tour of the sites and surrounding areas. All site visits will be scheduled at a time convenient to OHFA review staff.

For projects involving rehabilitation of existing units, OHFA staff will be required to visit individual units for the purpose of evaluating the current physical condition of a property. At least one representative of the applicant must participate. Any necessary tenant notifications should be issued prior to the site visit.

15. Announcement of Bond Gap Financing Awards (Round II)

Once competitive, underwriting and threshold reviews are complete; OHFA will announce award recipients on its website. Successful applicants will also be notified by phone and/or in writing. At this time, OHFA may require a meeting with the assigned Analyst and Operations Manager to discuss the project.

Bond Gap Financing Program Competitive Scoring Criteria

Projects will be selected based on the competitive criteria outlined in this section. There are two rounds of funding, with submissions accepted in July 2016 and March 2017. Priorities for each funding round are specified below.

Applicants must submit the scoring workbook and proper evidence for all competitive criteria that apply. If the proposed development is awarded an allocation of resources, applicants will be held to all commitments represented in the proposal application.

Points for each criterion will be awarded at the discretion of the Agency. For applications including multiple or scattered sites, all sites must meet competitive criteria to earn points. Up to 100 points are available. An application that does not achieve a minimum score of 50 points will not be considered for an award of resources under any circumstance.

Round I Policy Priorities:

1. **Preservation of Affordable Housing**
   OHFA will prioritize developments that preserve existing units of affordable housing at risk of no longer being affordable.
2. **New Affordable Housing Units in Areas Targeted for Revitalization**
   OHFA will prioritize at least one new affordable housing development in an area targeted for revitalization.
3. **New Affordable Housing Units in Areas of Moderate to High Opportunity**
   OHFA will prioritize at least one new affordable housing development located in a census tract meeting the Agency's definition of a moderate to high opportunity area.
4. **New Affordable Housing Units Serving Populations Defined in the Interagency Council on Homelessness and Affordable Housing Permanent Supportive Housing Policy Framework.**

Round II Policy Priorities:

Preservation of Affordable Housing

OHFA will only accept developments that preserve existing units of affordable housing.

Competitive Criteria for Preservation of Affordable Housing

Preservation Priorities

OHFA will prioritize developments that preserve existing units of affordable housing at risk of no longer being affordable. Proposals showing one or more of the following three risk factors will receive up to 45 points.

1. **Affordable Rent Advantage**: Developments that have an affordable rent advantage will be confirmed by reference to a market study submitted at proposal application and meeting all OHFA requirements. OHFA will rely on the market analyst's estimation of achievable market rents as compared to achievable restricted rents to determine the affordable rent advantage. To quantify affordable rent advantage, the market study will calculate and identify the following:

   *Affordable Rent Advantage = [1 - (achievable tax credit rents ÷ achievable market rents)] * 100*

Points Available	Affordable Rent Advantage
15	Developments with a minimum 15 percent affordable rent advantage for each bedroom size in the primary market area.
10	Developments with a minimum 10 percent affordable rent advantage for each bedroom size in the primary market area.
8	Developments with a minimum 5 percent affordable rent advantage for each bedroom size in the primary market area.

2. **Risk of Loss Due to Expiring Use Restrictions**: Developments with a use restriction that allows the owner to pre-pay current financing or opt-out of use-restrictions will be considered under this category.

   Applicants will provide evidence of the expired or expiring use restrictions, current financing and/or any contracts associated with the property.

Points Available	Risk of Loss Due to Expiring Use Restrictions
15	Non-housing tax credit developments with use restrictions that have expired or will expire in less than three years or 36 months.
10	Non-housing tax credit developments with expiring use restrictions that allow the owner to exercise the option to convert to market rate housing in 3-5 years
8	Non-housing tax credit developments with expiring use restrictions that allow the owner to exercise the option to convert to market rate housing in 5-7 years, or Existing housing tax credit developments that are eligible to exercise their option to file for a qualified contract and have a physical vacancy rate of five percent or less.

3. **Developments that have been maintained through good management**: Developments that have been maintained through good management but contain components that are past their effective useful life may show need for repair to or replacement of the following components: structural integrity, building envelope, roof and site drainage, plumbing and sanitation systems, mechanical systems, electrical systems, elevators and parking surfaces. Applicant must have owned the propose development for a minimum of 10 years. Applicants may seek points for priority '3' or '4', but not both.

Points Available	Developments That Have Been Maintained Through Good Management
15	Fifteen points will be awarded to applicants who submit a narrative describing the management history of the property, the components that need replacing, and a history of the use of the project's replacement reserves. **The proposed development will not have undergone substantial rehabilitation in the last 20 years.**
12	Twelve points will be awarded to applicants who submit a narrative describing the management history of the property, the components that need replacing, and a history of the use of the project's replacement reserves. **The proposed development will not have undergone substantial rehabilitation in the last 15 years.**

4. **Troubled assets that have been or will be acquired for the purpose of rehabilitation**: Developments that have been purchased in the past 5 years, or are currently in contract, for the purpose of rehabilitation will be considered for points under this criterion. OHFA may consider projects that were purchased more than 5 years ago, provided the applicant can demonstrate efforts to secure financing for the project. Applicants may seek points for priority '3' or '4', but not both.

Points Available	Developments That Have Been Acquired for the Purpose of Rehab
15	Fifteen points will be awarded to applicants who submit a narrative describing the management history of the property, the components that need replacing, a history of the use of the project's replacement reserves (if available), and why the project is considered a troubled asset. **The proposed development will not have undergone substantial rehabilitation in the last 20 years.**
12	Twelve points will be awarded to applicants who submit a narrative describing the management history of the property, the components that need replacing, a history of the use of the project's replacement reserves (if available), and why the project is considered a troubled asset. T**he proposed development will not have undergone substantial rehabilitation in the last 15 years.**

Financial Characteristics

OHFA will prioritize developments that demonstrate an efficient use of HDAP and with costs conducive to a moderate rehabilitation scale. Points will be awarded to developments meeting the following criteria.

Points Available HDAP Per Unit

Points Available	HDAP Per Unit
20	Developments requesting $8,000 or less in HDAP per unit
15	Developments requesting $8,001-10,000 in HDAP per unit
10	Developments requesting $10,001 or more in HDAP per unit, but less than $13,000

Rental Subsidy

OHFA will prioritize developments encumbered by a project based rental subsidy funded by a federal or state entity. The applicant will submit proof of the commitment for project-based rental subsidy at proposal application.

Points Available	Rental Subsidy
15	Developments in which 85 - 100 percent of the affordable units have project-based rental subsidy, or preserve at least 100 units
12	Developments in which 75-84 percent of the affordable units have project-based rental subsidy, or preserve at least 50 units
10	Developments in which at least 50 percent of the affordable units have project-based rental subsidy, or preserve at least 30 units

Location Based Characteristics

OHFA will prioritize developments located in one or more of the following geographies. Up to 20 points may be earned under this category.

Points Available	Location Based Characteristics
5	Developments located in a county showing new stable job growth between January 2009 and December 2013, defined by reference to the 2016 Ohio Housing Needs Assessment. A list and map of eligible counties is available on the OHFA website. Applicants will submit a screen capture from the OHFA Policy Map scoring tool to evidence eligibility for this criterion at proposal application.
5	Developments located in an area of moderate to high opportunity, defined by reference to the OHFA Opportunity Index. Applicants will submit a screen capture from the OHFA Policy Map scoring tool to evidence eligibility for this criterion at proposal application.
5	Developments located in areas that are part of a revitalization or economic development plan. Applicants will provide evidence of the plan or strategy, which may be a link or reference to the guiding document and a narrative detailing the revitalization strategy and describing any planned or committed investments in the area targeted by the plan.

5	Developments located in one of the 32 Appalachian counties, as designated in the Appalachian Regional Development Act of 1965. Applicants will submit evidence that the development is located in an eligible county.
5	Developments located within a half mile of a public transit stop or facility offering service at regular frequencies (at least three trips per weekday) to local or regional destinations. Applicants will submit documentation showing the distance to the nearest stop and the route(s), service frequency, operating hours and associated costs for all public transit services.
5	Developments located in a non-urban county showing population growth between years 2010-2014, defined by reference to the 2016 Qualified Allocation Plan and Ohio Housing Needs Assessment. Applicants will submit a screen capture from the OHFA Policy Map scoring tool to evidence eligibility for this criterion at proposal application.

Strategic Initiatives and Tie-Breakers

1. OHFA will award Bond Gap Financing resources in a manner that promotes statewide geographic distribution. A set-aside for allocation to a minimum of **one proposal in a low population county and one proposal in a mid-sized county, as defined in the 2016-2017 Qualified Allocation Plan**, will be administered by OHFA. Proposals must achieve the minimum score of 50 points and be located in a HUD non- participating jurisdiction for consideration of this set-aside.

   A low population county is defined as a county with a total population of less than 50,000. A mid-sized county is defined as a county with a total population of 50,000 or more, but less than 99,000. A map of eligible counties is presented in the 2016 Ohio Housing Needs Assessment available on the OHFA website.

2. Where additional tie-breakers are necessary, OHFA will observe the following (in order):

   a. Developments that have scored the greatest number of points for locational characteristics.

   b. Developments with the greatest number of affordable units.

   c. Developments with the lowest HDAP per affordable unit request.

   d. Developments in which the applicant and/or developer has demonstrated experience in developing housing using both 4% credits and HDAP funds.

   e. Developments evidencing the ability to move forward quickly.

Competitive Criteria for New Affordable Housing

New Development Priorities

5 Points per Criteria

1. **New Affordable Housing Units in Areas Targeted for Revitalization:**

   Developments that are located in areas targeted for revitalization will show support from the applicable unit of local government or neighborhood or community based organization(s) that serve or represent the community in which the project will be located, or the populations to be served.

   Required Documentation: The applicant will submit a signed letter of support on letterhead from the applicable entity. If submitting a letter from a neighborhood or community based association, only one letter will be considered. The organization may not have an ownership interest in the proposed project.

2. **New Affordable Housing Units in Areas of Moderate to High Opportunity:**

   Developments that are located in a census tract meeting OHFA's definition of moderate to high opportunity areas are a priority of the Agency.

   Required Documentation: Applicants will submit evidence at proposal application showing the projects eligibility for the above referenced criteria, where applicable. A screen capture from the Opportunity Mapping Tool will be acceptable to OHFA.

3. **New Affordable Housing Units Serving Populations Defined in the Interagency Council on Homelessness and Affordable Housing Permanent Supportive Housing Policy Framework:**

   Required Documentation: Developments that will serve vulnerable populations must submit a commitment for rental subsidy at proposal application covering the difference between 30 percent of the resident's income and the fair market rent for at least 50 percent of all units. Additionally, the majority general partner(s) must be a non-profit organization with experience developing, owning or managing supportive housing for the population to be served.

Financial Characteristics

1. **HDAP per Unit**: OHFA will prioritize developments that demonstrate an efficient use of HDAP. Up to 15 points will be awarded to developments meeting one of the following criteria.

Points Available	HDAP Per Unit
15	Developments requesting $10,000 or less in HDAP per unit
12	Developments requesting $10,001 - $13,000 in HDAP per unit
10	Developments requesting at least $13,001 but less than $15,000 in HDAP per unit

2. **Local Financial Support**: OHFA will prioritize developments that demonstrate local or other financial support and that leverage additional resources. Up to 30 points will be awarded to developments meeting two or more of the following criteria.

Points Available	Local Financial Support
10	Developments evidencing commitment for a property tax abatement or payment in lieu of taxes resulting from improvements to a site, building or property through new construction or rehabilitation. When preparing the cash flow analysis, applicants must show the net benefit of any abated taxes for each year received to document eligibility for points.

10	Developments that will involve the redevelopment of land donated or sold at a nominal price for the purpose of housing development. An application showing acquisition costs for a site that is no more than 10 percent of appraised market value, meets the definition of nominal under this criterion.
10	Developments that leverage non-OHFA resources (excluding Multifamily Lending Program financing) in an amount of at least 10 percent of total development costs. Equity from the sale of housing tax credits, deferred developer fee, related party debt that must be repaid, bond proceeds and HDAP will not be considered. All other resources are considered eligible.
10	Developments for which the local government has waived processing, permit or impact fees related to the costs of development in an amount of at least $10,000.

Income Targeting

OHFA will prioritize developments that serve households with special and underserved needs, including extremely low-income households and persons with disabilities.

1. **Extremely Low-Income Targeting**: 10 Points will be awarded to developments meeting the following criteria. Developments seeking consideration for New Development Priority "3" (listed above) will receive the maximum points available for under this category.

Points Available	Income Targeting
10	Developments in which a minimum of 10 percent of all affordable units will be occupied by and affordable to households at or below 30 percent of AMI.
8	Developments in which a minimum of 5 percent of all affordable units will be occupied by and affordable to households at or below 30 percent of AMI.
5	Developments in which a minimum of 5 units will be occupied by and affordable to households at or below 30 percent of AMI.

2. **Ohio Section 811**: 10 points will be awarded to developments meeting the following criteria. Developments seeking consideration for New Development Priority "3" will not be eligible for points for under this category.

Points Available	Ohio Section 811
10	Developments in which at least 25 percent of the affordable units seek Ohio Section 811 project-based rental subsidy. A viable application for Ohio Section 811 project-based rental subsidy will be submitted concurrent with proposal application. Where requirements cannot be achieved or delivery of the subsidy is found to be unfeasible, developments will be restructured to provide an additional five percent of units at or below 30 percent of AMI.

Land Uses

Proximity to Positive Land Uses

Up to 10 points may be awarded to proposals located in proximity to positive land uses and amenities.
Eligible amenities are specified in the table of approved amenities shown below.
Distances should be calculated as linear distances (as the crow flies) using Google Maps.

URBAN COUNTIES	▪ Ten points will be awarded to developments within a quarter-mile linear distance of at least three amenities, or a half-mile linear distance of at least six amenities ▪ Nine points will be awarded to developments within a quarter-mile linear distance of at least two amenities, or a half-mile linear distance of at least four amenities ▪ Six points will be awarded to developments within a quarter-mile linear distance of at least one amenity or a half-mile linear distance of at least three amenities
NON-URBAN COUNTIES	▪ Ten points will be awarded to developments within a one-mile linear distance of at least four amenities, or a two-mile linear distance of at least seven amenities ▪ Nine points will be awarded to developments within a one-mile linear distance of at least three amenities, or a two-mile linear distance of at least six amenities ▪ Six points will be awarded to developments within a one-mile linear distance of at least two amenities, or a two-mile linear distance of at least five amenities

Eligible positive land use amenities:

RETAIL	SERVICES	PUBLIC FACILITIES
▪ Clothing or department store ▪ Farmer's market or community garden ▪ Full service supermarket with fresh produce ▪ Pharmacy ▪ Restaurant, café or other service	▪ Adult or senior care (licensed) ▪ Child care ▪ Hospital, medical clinic ▪ Bank ▪ Laundromat or dry cleaner	▪ Community recreation center or park owned and maintained by local government ▪ Cultural arts facility ▪ Educational facility or college ▪ Government office serving the public ▪ School with any grades K-12 ▪ Place of worship ▪ Police or fire station ▪ Public library ▪ Senior center ▪ Social services center ▪ Transit stop or facility offering service at regular frequencies to local or regional destinations

Proximity to Detrimental Land Uses

OHFA will award 10 points to developments involving new construction where there is no detrimental land use immediately adjacent to the site of the proposed development. Detrimental land uses will be those deemed at OHFA's sole discretion and verified by completion of a site visit including without limitation, adjacent properties that are vacant and severely blighted or that present a health and safety concern.

Applicants may choose to include a narrative with their application explaining any plans or strategies to treat or address an adjacent nuisance, any adverse conditions or vacant and blighted properties nearby to the proposed site.

Strategic Initiatives and Tie-Breakers

Were additional tie-breakers are necessary, OHFA will observe the following (in order):

1. Developments with the greatest number of affordable units.
2. Developments in which the applicant and/or developer has demonstrated experience in developing housing using both 4% credits and HDAP funds.
3. Developments with the lowest HDAP per affordable unit request.
4. Developments evidencing the ability to move forward quickly.

Housing Development Gap Financing Guidelines

The Housing Development Gap Financing program provides financing assistance to smaller developments – those including 24 or fewer units. Eligible projects may involve the rehabilitation of existing housing or the creation of new units of affordable housing for households with low-incomes and/or special needs. Approximately $2-4 million in Ohio Housing Trust Funds will be made available in the 2016 program year to support successful Housing Development Gap Financing developments.

Developments assisted through the Housing Development Gap Financing program are subject to OHFA's most current underwriting and design requirements

For developments involving rehabilitation of existing units, applicants will be further required to meet the Residential Rehabilitation Standards maintained by the Office of Community Development at the Ohio Development Services Agency. The proposed scope of work will also be evaluated to determine that an adequate amount of rehabilitation is being completed to ensure the projects' expected useful life of 30 years.

To comply with all applicable requirements, OHFA recommends that applicants consult the following related documents for their proper interpretation:

- 2016-2017 Multifamily Underwriting Guidelines
- Residential Rehabilitation Standards – Office of Community Development, Ohio Development Services Agency
- Market Study Standards
- Capital Needs Assessment Standards and Effective Useful Life Schedule
- 2016 Appraisal Requirements

A note to partners who utilized the former Capital Investments Program (CIP):

With the goal of improving the housing quality standard for housing serving persons with severe and persistent mental illness, OHFA will continue its partnership with the Ohio Department of Mental Health and Addiction Services (OhioMHAS) to address the immediate capital needs of existing units or new units mortgaged through OhioMHAS. OHFA resources will be made available to support such proposals through in the Housing Development Gap Financing program. Refer to page 56 of the Housing Development Gap Financing program guidelines for further instruction.

Funding Limits

OHFA will provide funding up to a maximum of:

- $500,000 for all Housing Development Gap Financing developments

Unless otherwise noted or approved by staff, developers and owners will be limited to one award.

Additional Rent Restrictions

All developments will commit to one of the following selections, based on the location of the proposed project:

- HUD Participating Jurisdiction: A minimum of 40 percent of the affordable units must be affordable to households with incomes at or below 50 percent of AMI
- Non-HUD Participating Jurisdiction: A minimum of 35 percent of the affordable units must be affordable to households with incomes at or below 50 percent of AMI

Eligible Uses of HDAP Resources

HDAP resources may only be applied in the development budget toward non-related party acquisition, hard costs associated with new construction or rehabilitation, and developer fees associated with the proposed development. If market rate housing and/or commercial spaces are involved in the proposed development, costs associated with creating the market rate housing and/or commercial spaces cannot be paid using HDAP funds. Development budget line items that can be paid for using HDAP funds include:

- Acquisition of land and/or building(s) (from unrelated parties only);*
- Demolition (not applicable for Preservation projects);
- On-site improvements;
- Construction and/or renovation costs including construction fee items, construction contingency, and contractor overhead and profit (excluding costs associated with construction of commercial property);
- Furnishings and appliances;
- Architectural and engineering fees;
- Developer fees, including consultant fees and any construction management fees paid to the developer; or
- Legal fees.

Other development budget expenses must be covered by sources of financing other than HDAP.

NOTE: OHFA may, on a case-by-case basis, allow for HDAP/OHTF funds, to be used to reimburse the applicant/project for land and/or buildings purchased prior to the execution of the HDAP funding agreement. The applicant should work with OHFA prior to submission of their application to discuss possible use of HDAP to reimburse acquisition costs. Projects awarded HOME funds may not use the award to reimburse the applicant/project for acquisition costs.

Housing Development Gap Financing cannot be used to assist projects that:

- Include fewer than four units, local boards of mental health and/or developmental disabilities may request an exception to this requirement if the proposed development has a recommendation from the Ohio Department of Mental Health and Addiction Services or the Ohio Department of Developmental Disabilities
- Have an outstanding balance or that have received a previous award of Housing Development Assistance Program resources;
- Involve new construction or rehabilitation of Single-Room Occupancy (SRO) housing;
- Must be licensed to allow for residents to occupy the development; and/or
- Local zoning codes define the unit(s) proposed to be developed as a group home; and/or
- Are identified as hospitals, nursing homes, sanitariums, life care facilities, retirement homes (if providing significant services other than housing are mandatory for residents), employer housing, mobile homes and student housing;
- Include for sale homes.
- Require residents to occupy the unit with another person (roommate).

Eligible Applicants

Eligible applicants will include private for-profit housing developers, not-for-profit 501(c)(3) and 501(c)(4) organizations, and public housing authorities proposing to create new affordable rental housing opportunities, or preserve existing affordable housing.

In the Housing Development Gap Financing program, OHFA is interested in partnering with developers and owners with experience in successfully completing multifamily housing developments and/or demonstrate an ability to proceed in a timeframe consistent with the requirements of applicable federal and state regulations.

Applicants who will partner with a state agency specified under Strategic Initiatives (see page 56), may request an exception to the minimum unit count requirement specified in the Housing Development Gap program guidelines.

All applicants must have experience developing the type of housing proposed and working with any targeted populations.

Minimum Development Standards

Final Submissions Architectural Plans

Applicants must submit 80 percent complete permit sets at the time of final application. Sets must show compliance with the preliminary submittal, including the Design and Construction Features Agreement. Eighty percent plans must be submitted in PDF format (separate PDF files for drawings and specifications) that include all site plans, dimensioned floor plans, elevations, wall sections, structure, finishes, details and mechanical plans. A copy of the final executed Design and Construction Features Agreement must be included in 80 percent plan sets. Additionally, each development must have dimensioned floor plans submitted in DXF or DWG AutoCAD R-14 format and an 11"x17" plan hard copy (dimensioned floor plans only).

Requests for exceptions to minimum development standards may only be submitted for the following requirements: (1) common area restrictions, (2) minimum unit size – new units only, (3) parking requirements, (4) single room occupancy, and (5) visitability. All requests for exceptions must be submitted to OHFA by the date indicated in the program calendar. The OHFA staff architect will review requests and make a recommendation to managers who will issue a final determination, also by the date indicated in the program calendar.

Bedroom Requirements

Requirements for bedrooms shall apply to all new construction and adaptive reuse developments.

OHFA will evaluate proposals including rehabilitation of existing units to ensure that bedrooms are large enough to provide adequate living space.

1. For a one-bedroom unit, the bedroom must be at least 120 square feet.
2. For a two-bedroom unit, the master bedroom must be at least 120 square feet, and the second bedroom must be at least 110 square feet.
3. For a unit with three or more bedrooms, the third and fourth bedrooms must be at least 100 square feet.
4. Bedrooms must have walls and doors separating them from adjacent space to be considered as bedrooms. Any room shall be considered as a portion of the adjoining room when at least one-half of the area of the common wall is open and unobstructed.

Common Area Restrictions

The maximum common area (including required circulation) in any development is 20 percent of the total gross building square footage. Dedicated program space is excluded from this calculation. Such spaces include counseling spaces for adults and children, wellness areas, day care, etc. Spaces that would not be considered dedicated program space include libraries, fitness areas, computer rooms, common meeting space, etc. Existing rental housing units are exempt from this criterion. OHFA will consider exception requests for this requirement.

Additional Requirements for New Construction and Adaptive Reuse

1. Single-site multifamily developments must provide a parking lot with concrete curbs or wheel stops and at least one parking space for each unit in the development. Exceptions to this requirement may be permitted on a case-by case basis for developments located in dense urban areas, or for developments serving the elderly or permanent supportive housing populations.
2. Each bedroom must be at least seven feet in each direction, and contain a closet in addition to the minimum square footage.
3. Minimum unit sizes (residential living space) are as follows, inclusive of the above bedroom sizes.

   Efficiency Units: Exceed 450 SF
   1-Bedroom Units: Exceed 650 SF
   2-Bedroom Units: Exceed 850 SF

3-Bedroom Units: Exceed 1,000 SF
4-Bedroom Units: Exceed 1,200 SF

4. OHFA will not fund developments that contain single-room occupancy units. OHFA will consider exception requests for this requirement for PSH projects.
5. Developments including new units must provide a bathroom or half bath on the main floor with clear floor space of 30 inches by 48 inches.
6. Proposals for PSH may contain one-bedroom units that are 540 square feet or larger. OHFA will also consider developments that meet HUD minimum property standards. Applicants may request consideration through the exception request process.
7. OHFA reserves the right to limit the size of units during the application review process.
8. Three-bedroom units must contain at least one and a half bathrooms and units with four or more bedrooms must contain at least two full bathrooms.
9. New construction proposals must include new appliances.

Additional Requirements for Senior Housing Developments

1. Proposals for senior housing are required to have all units with no more than two bedrooms and no more than one and one-half baths.
2. Proposals for senior housing are required to have all buildings with only one story unless an elevator is provided.

Visitability

Requirements for visitability shall apply to all developments financed with OHFA resources.

1. **No step entrance:**
   Provide at least one "no step" entrance into the unit. The required "no step" entrance shall be accessed via an accessible route (driveway, sidewalk, garage floor, etc.). Ramps that extend out into the front or back yards are usually not the appropriate solution. OHFA can provide technical assistance or referral to appropriate resources at the applicant's request.
2. **Doors/Openings:**
   All doors and openings shall have a minimum net clear width of 32 inches.
3. **Bathroom/Half Bath:**
   Provide a bathroom or half bath on the main floor with clear floor space of 30 inches by 48 inches.

If the applicant feels that some or all of the development's proposed buildings will be unable to meet the visitability requirements due to topography, other site/design limitations or existing unit conditions, the applicant must complete form PPD-E01 for Reconsideration of Visitability requirements by the date indicated in the program calendar. The OHFA staff architect will identify recommendations and/or make a determination as to whether one or more requirements should be waived.

Universal Design Requirements

OHFA values developing housing designed to be used by all. This concept is generally referred to as Universal Design. Universal Design is defined as, "the design of products and environments to be usable by all people, to the greatest extent possible, without the need for adaptation or specialization."

All units developed with OHFA resources will be designed to meet the following principles of Universal Design. Applicants submitting proposals for an award of funding must submit designs addressing the following principles and a narrative detailing the Universal Design features to be included in proposed development. The narrative, which is a component of the Design and Construction Features Agreement, should be accompanied by a list or matrix organized by room and functional area (such as hallway, stairway and general circulation). A template for the list and/or matrix will also be made available in the Design and Construction Features Agreement.

OHFA staff will work with each applicant to help achieve maximum application of Universal Design principles. Any features that will not comply with this policy must be disclosed in the Universal Design narrative at the time of application and will be reviewed by the OHFA staff architect. Applicants must receive design approval from OHFA before proceeding with the implementation of a proposal.

Principles of Universal Design:

1. Equitable Use:
   The design does not disadvantage or stigmatize any group of users.
2. Flexibility in Use:
   The design accommodates a wide range of individual preferences and abilities.
3. Simple, Intuitive Use:
   Use of the design is easy to understand, regardless of the user's experience, knowledge, language skills or current concentration level.
4. Perceptible Information:
   The design communicates necessary information effectively to the user, regardless of ambient conditions or the user's sensory abilities.
5. Tolerance for Error:
   The design minimizes hazards and the adverse consequences of accidental or unintended actions.
6. Low Physical Effort:
   The design can be used efficiently and comfortably and with a minimum of fatigue.
7. Size and Space for Approach and Use:
   Appropriate size and space is provided for approach, reach, manipulation and use, regardless of the user's body size, posture or mobility

Additional Requirements

Conformity to Fair Housing Requirements:

1. All newly constructed units developed under OHFA guidelines shall be designed to comply with the Fair Housing Act (FHA) - even those units not covered by the Act.
2. Units that are being rehabilitated shall be designed to incorporate all required features to the greatest extent possible, including visitability, Universal Design and green standards.
3. In a two or more story single family house or townhome, all floors must be designed in accordance with criteria three through seven, as identified below. To be clear, this means that all bathrooms, kitchens, hallways, doors, light switches, electrical outlets, thermostats and other environmental controls must conform to those requirements.

Compliance with the Fair Housing Act Calls for Seven Basic Design and Construction Requirements:

1. An accessible building entrance on an accessible route.
   All units must have at least one no-step entrance and be on an accessible route. An accessible route means a continuous, unobstructed path connecting accessible elements and spaces within a building or site that can be negotiated by a person with a disability who uses a wheelchair, and that is also safe for and usable by people with other disabilities. An accessible entrance is a building entrance connected by an accessible route to public transit stops, accessible parking and passenger loading zones, or public streets and sidewalks.
2. Accessible common and public use areas.
   Developments must have accessible and usable public and common-use areas. Public and common-use areas cover all parts of the housing outside individual units. They include, for example: building-wide fire alarms, parking lots, storage areas, indoor and outdoor recreational areas, lobbies, mailrooms and mailboxes and laundry areas.

3. Usable doors (usable by a person in a wheelchair).
   All doors that allow passage into and within all premises must be wide enough to allow passage by persons using wheelchairs.
4. Accessible route into and through the dwelling unit.
   There must be an accessible route into and through each unit. This includes all hallways, stairways and doorways.
5. Light switches, electrical outlets, thermostats and other environmental controls must be in accessible locations. Light switches, electrical outlets, thermostats and other environmental controls must be in accessible locations.
6. Reinforced walls in bathrooms for later installation of grab bars.
   Reinforcements in bathroom walls must be installed, so that grab bars can be added when needed.
7. Usable kitchens and bathrooms.
   Kitchens and bathrooms must be usable — that is, designed and constructed so an individual in a wheelchair can maneuver in the space provided.

Application Review Process

1. **Exceptions to Program Requirements**

   Requests for exceptions to program requirements may be considered on a limited basis by OHFA. Applicants seeking a waiver from program requirements will submit the Exception Request Form and supporting documentation with the pre-application. The Exception Request form is available on the OHFA website.

2. **Pre-Application Submission**

   Applicants to the Housing Development Gap Financing program will submit a pre-application that meets all requirements specified in the program guidelines. Pre-applications will be mailed or delivered on or before the close of the selected application period.

   An application fee of $500 must be submitted with the pre-application. Subsequent submissions of the same project in the 2016 rounds will be assessed a fee of $200. Applicants who are invited to submit a final application must submit an additional fee in an amount of $500 with the final application.

   This process is intended to minimize the amount of cost and documentation required to initially apply for funding, while enabling OHFA to evaluate the eligibility, capacity and characteristics of a proposed project.

   The pre-application in Round I is designed for applicants with a commitment of Federal Home Loan Bank (FHLB) Affordable Housing Program (AHP) resources or projects that do not include this funding source. Round II is limited to applicants who were successful in receiving an award of AHP in its most recent funding cycle.

3. **Competitive Review**

   The competitive review process for Housing Development Gap Financing pre-applications will involve the evaluation of limited aspects of a proposal, including without limitation, market quality, affordability, impact on the targeted populations or surrounding community, experience and capacity of the applicant and quality of the application submission.

   Because minimal documentation is required at the pre-application phase, OHFA will not allow any pre-application deficiencies to be cured.

   During the competitive review process, OHFA may request an informational interview with representatives of some or all proposals on a case-by-case basis. If partnering with another state agency for consideration under the scoring category strategic initiatives, the respective state agency will be invited to participate in any pre-application meetings.

4. **Pre-Award Site Visit**

   OHFA may conduct a site review for all pre-applications to evaluate and determine the suitability of a prospective site for the proposed use. If a site is deemed unsuitable based on the site review, the application will be removed from further consideration.

   Up to two (2) representatives of the applicant who are familiar with the proposal application are encouraged to accompany OHFA staff to answer any questions. Applicants for scattered-site developments must be available to provide a tour of the sites and surrounding areas. All site visits will be scheduled at a time convenient to OHFA review staff.

   For projects involving rehabilitation of existing units, OHFA staff will be required to visit individual units for the purpose of evaluating the current physical condition of a property. At least one representative of the applicant must participate. Any necessary tenant notifications should be issued prior to the site visit.

5. Announcement of Housing Development Gap Financing Awards

OHFA will notify those applicants invited to submit a final application at the close of each application window – June 30, July 31, August 31 and December 22, 2016. At this time, the applicant may schedule a meeting with the assigned Analyst and Operations Manager to discuss and plan 'next steps' prior to submitting the final application.

The time between announcement of an award and submission of the final application is an opportunity for applicants to request clarification, ask questions and access OHFA staff as they prepare a complete and organized final application that meets OHFA's requirements for funding.

Funds will not be reserved until an application meeting all OHFA requirements is submitted at the satisfaction of the Agency. OHFA reserves the right to remove any applications that are incomplete or inconsistent from further consideration.

6. Final Application Submission

A final and complete application will be submitted within three months of notification of an award and no later than March 3, 2017. Any changes made to the project after the announcement of awards must be approved by OHFA prior to submitting the final application.

Housing Development Gap Financing Program Competitive Scoring Criteria

Projects will be selected based on the competitive criteria outlined in this section.

Applicants must submit the required pre-application and proper evidence for all competitive criteria that apply in the prescribed form by the deadline indicated in the program calendar. Late and/or incomplete submittals will not be considered.

Proposals will be reviewed by a committee of Planning, Preservation and Development staff and referred to the Director of Planning, Preservation and Development for funding recommendations.

When evaluating pre-applications, OHFA staff will consider the needs of the project, the experience of the applicant and any associated risk in the project, including knowledge of OHFA programs as demonstrated in the pre-application, and the status of the proposal (how far along in the predevelopment stage).

During the pre-application review process, the OHFA review committee may request an informational interview with representatives of some or all proposals. Informational interviews will take place at OHFA with the last available meeting date occurring on October 4, 2016.

Pre-Application Criteria for Selection

Applications will be evaluated and developers selected based on the following criteria:

Applicant/Developer Experience and Capacity

The applicant will describe the history of the organization, including accomplishments with respect to past housing developments, programs and services provided to the community or neighborhood served and any planned or committed activities for the future.

- *Highest consideration will be given to development teams that have placed in service at least one affordable housing project that included local, state or federal funding in the past 5 years. In addition to the above referenced narrative, the applicant will provide copies of any documentation or reporting evidencing the closing of these resources.*

Site Control

The applicant will provide evidence that site control is maintained at the time of pre-application.

If the current owner is the applicant in the development, the proposal application will include copies of the executed and recorded deed(s) at the time of application.

If the current owner is not applicant in the development, then evidence of site control must be submitted.

Acceptable forms of site control include, but are not limited to, a purchase contract, a purchase option or a lease option for a minimum term of 35 years. At a minimum, site control must be valid throughout the month in which the application is submitted. It is important to note that the proposed site cannot change with the final application.

Financial Feasibility

The applicant will include an initial budget showing all sources and uses for construction and permanent financing.

If the project is existing, the applicant will outline the current rent structure and the income levels of the current residents.

Discuss any pre-development funding that is being provided to the project, including whether funds are in the form of a loan or grant, and the expenses and activities covered.

Finally, the operating budget must align with the rent levels, tenant income, physical design and property management needs that reflect the targeted tenant population.

If the development budget includes funding from a source that that is not at least conditionally committed at final application, the applicant will detail at least one viable alternative to fill any gaps, including commitments for alternate sources.

- *Priority will be given to applicants that demonstrate an ability to proceed in a timeframe consistent with the requirements of the Ohio Housing Trust Fund.*
- *Highest consideration will be given to proposals with at least 10 percent of total financing sources conditionally committed at pre-application.*

Project Design

The applicant will describe the planned design of the proposed project including its compatibility with surrounding uses and/or the needs of the target population. If available, the applicant may include an architectural drawing or rendering.

If any aspects of the development will include energy-saving improvements, enhanced accessibility features, or other unique features, the applicant will describe those items or activities.

If the project is existing, the applicant will provide photographs of all structures at application. The Design and Construction Features Agreement Existing Units Narrative must further address the condition and history of maintenance on the property, including the use of any reserves.

Local Support

The applicant will describe any outreach conducted to neighborhood groups, grassroots organizations, local community development corporations, potential tenant populations, and local government officials to determine support, interest and/or opposition to the proposed development, as well as identify other proposed housing for the area.

The applicant may attach written comments received including support and/or opposition letters with respect to the proposed project.

Strategic Initiatives

OHFA will prioritize developments committing to serve populations with special and underserved needs and partnering with an eligible State of Ohio Agency. OHFA's goal is to provide funding for at least two proposals meeting one of the following strategic initiatives:

1. Projects with a new or existing mortgage through the Ohio Department of Mental Health and Addiction Services (OhioMHAS) and serving persons with severe and persistent mental illness.

   The applicant must provide a letter from the respective state agency at pre-application indicating that the project seeking Housing Development Gap financing has a current mortgage or has received at least a preliminary review and meets the requirements of Ohio MHAS for a new mortgage.

   Existing projects may serve the target population exclusively. If the proposal will involve new construction, units must be integrated into a larger development with no more than 10 percent of units to be occupied by the target population.

   If the project is existing, the required letter must also specify any amount of capital funds granted to the project by OhioMHAS to address immediate capital needs.

2. Projects leveraging capital funds from the Ohio Department of Developmental Disabilities (DODD) for the purchase or rehabilitation of housing serving persons with developmental disabilities.

   The applicant must provide a letter from the respective state agency at pre-application indicating that the project seeking Housing Development Gap Financing has received at least a preliminary review and meets the requirements for a new commitment of capital funds from the Ohio Department of Developmental Disabilities.

   Units must be integrated into a larger development with no more than 10 percent of all units to be occupied by the target population.

OHIO HOUSING FINANCE AGENCY

2016 - 2017

MULTIFAMILY UNDERWRITING GUIDELINES

Approved by the OHFA Board: August 19, 2015

web www.ohiohome.org | **tollfree** 888.362.6432

The Ohio Housing Finance Agency is an Equal Opportunity Housing entity. Loans are available on a fair and equal basis regardless of race, color, religion, sex, familial status, national origin, military status, disability or ancestry. Please visit www.ohiohome.org for more information.

Table of Contents

Introduction 4

Competitive (9%) Housing Tax Credits Underwriting Process 4

Non-Competitive (4%) Housing Tax Credits Underwriting Process 4

OHFA Gap Financing Programs (HDGF, CIP, CFEHI Underwriting Process) 4

I. Development Budget 5

A. Development Budget Overview 5
- *1. Cost Reasonableness 5*
- *2. Sources and Uses 5*
- *3. Other Line Items 5*

B. Acquisition and Land Costs 5

C. Related Party Acquisitions 5

D. Construction Related Costs 6
- *1. Hard Construction Costs 6*
- *2. Rehab Minimum Hard Construction 6*
- *3. Construction Interest 6*
- *4. Construction Contingencies 6*
- *5. Contractor's Cost Limits 6*
- *6. Construction Cost Savings 6*

E. Professional Soft Costs 7
- *1. Professional Soft Costs 7*
- *2. Professional Soft Cost Limits 7*
- *3. Professional Soft Cost Contingencies 7*
- *4. Developer Fees 7*

F. Reserves 8
- *1. Operating Reserves 8*
- *2. Replacement Reserves 8*
- *3. Special Reserves 8*

II. Development Financing 9

A. All Sources Identified 9

B. Commitment Letters 9
- *1. Equity Commitment 9*
- *2. Debt Financing 9*
- *3. Other Commitment Letters 9*

C. Deferred Developer's Fee 9

III. Income and Expense Analysis 10

A. Income and Expense Overview 10
- *1. Operating Expense Reasonableness 10*
- *2. Vacancy 10*
- *3. Income/Expense Escalations 10*
- *4. Lease Option Agreements 10*

B. Expenses 10
- *1. Utility Allowances 10*
- *2. Syndicator Expenses 10*
- *3. Service Coordination Expenses and Fees 10*

C. Income 11
1. Rental Income *11*
2. Commercial Income *11*
3. Other Income *11*
D. Debt Coverage Ratio 11
E. Subsidy Layering Review 11

IV. Credit Calculation (Tax Credit Developments Only) 12
A. Tax Credit Percentage 12
B. Eligible Basis 12
C. Acquisition Basis 12

V. Development Changes 13

Introduction

In accordance with the Ohio Housing Finance Agency's (OHFA) policy and state and federal requirements, OHFA will perform underwriting analysis on all proposal applications that request an award of any OHFA resources. Each evaluation will consist of a review of the financing sources, development budget, income and operating expenses and a cash flow analysis. The underwriting process and standards are designed to ensure that OHFA awards the minimum amount of subsidy necessary for the successful development of affordable housing that meets the goals of OHFA's Annual Plan.

OHFA reserves the right to request further clarification, justification or documentation for any questions that are identified during the underwriting analysis. At its discretion, OHFA may reduce, alter or remove items that do not meet the underwriting standards in these guidelines. Developments must meet OHFA standards, unless an exception is clearly indicated. Exceptions must be submitted with the proposal application.

OHFA reserves the right to deny any application that does not meet the underwriting standards in these guidelines.

The Multifamily Underwriting Guidelines may be subject to change, pending developments in federal and state legislative requirements and/or OHFA policy.

Unless otherwise approved by OHFA, the Multifamily Underwriting Guidelines will be used beginning with all 2016 funding rounds.

Developments will be underwritten based on the funding source being applied for:

Competitive (9%) Housing Tax Credits Underwriting Process

All developments applying for an allocation of competitive 9% housing tax credits (with or without OHFA gap financing) undergo an underwriting review three times:

- At proposal submission to determine if they are eligible to continue in the competitive process;
- At final application prior to issuing a Carryover Allocation Agreement; and
- At the time the development is placed-in-service and requests IRS Form(s) 8609.

Non-Competitive (4%) Housing Tax Credits Underwriting Process

All developments applying for an allocation of 4% housing tax credits will undergo an underwriting review at application prior to issuing a 42m Letter of Eligibility. A final underwriting review will take place at the time the development is placed-in-service and requests IRS Form(s) 8609.

OHFA Gap Financing Programs (HDGF, CIP, CFEHI Underwriting Process)

All developments requesting OHFA gap financing, including Housing Development Assistance Program (HDAP) resources, will undergo an underwriting review at proposal and again at the time of final application, if applicable.

I. Development Budget

A. Development Budget Overview

1. Cost Reasonableness

OHFA will evaluate development costs by comparing application costs to similar developments, based on construction type and region, using the Development Applications Cost Database.

Additional information will be required at the discretion of OHFA for developments that exceed budget categories based on the comparisons. Developments that cannot provide such information may be removed from consideration of funding.

Total development costs will be evaluated on a per unit, per bedroom and per square foot basis.

OHFA reserves the right to use other data sources to assess cost reasonableness.

Developments will be subject to any cost caps imposed by the specific program to which application is made, if applicable.

2. Sources and Uses

All costs must be identified, including acquisition, construction, contingencies, reserves, developer fees and other soft costs. Applicants should contact OHFA for instructions on how to account for any unusual costs.

The development's total sources must always equal the total development cost. If the sources exceed the costs, OHFA will reduce any OHFA gap financing and/or Housing Credit amount so that sources equal uses.

For items funded following construction, the applicant must classify these items in the construction sources as post construction fees and costs.

3. Other Line Items

All "other line items" utilized in the development budget must include an explanation of the cost(s).

B. Acquisition and Land Costs

For competitive and non-competitive housing tax credit developments, OHFA will subtract the land valuation identified in the appraisal from the total property valuation or the purchase price, whichever is less, to arrive at the amount of allowable acquisition basis. If the total purchase price is less than the total property valuation, OHFA will employ the relative percentage of the property's land valuation to total property valuation to arrive at the allowable acquisition basis. OHFA reserves the right to limit the valuation of the property to the as-is restricted or as-is market valuation.

Developments receiving OHFA gap financing may not have building acquisition or land costs higher than the appraised value.

OHFA may permit an exception for developments with assumed HUD/RD debt.

C. Related Party Acquisitions

Owners of existing properties may submit an application for competitive or non-competitive housing tax credits to refinance and rehabilitate a property. In these instances the following conditions will apply:

1. If seeking an award of competitive housing tax credits, seller financing is allowable up to the amount of the lower of the purchase price or appraised value, less the relative land valuation.
2. If the transaction includes a cash settlement or other consideration to the owner/seller of the property, the development will not be considered for other gap financing offered by OHFA including HDAP unless approval is granted prior to submission of the proposal application. The applicant will be required to provide each of the following:
    a. An estimated amount of cash out or consideration to the owner/seller;
    b. A narrative explaining why the additional subsidy is necessary for successful rehabilitation of the proposed project. If this explanation includes paying off or restructuring existing debt or other financial obligations, an analysis of those costs must be provided.
    c. For the 2016-2017 housing tax credit funding rounds, the foregoing documentation must be submitted to OHFA prior to the Next Steps Meeting.

OHFA reserves the right to determine whether or not gap financing is appropriate and necessary for the proposed project. OHFA will not consider exit taxes or payouts to existing limited partners as a justification to support the request of additional gap financing.

D. Construction Related Costs

1. Hard Construction Costs

Hard construction costs are defined as the total of on-site development costs and hard construction (residential rehabilitation, new construction, commercial construction, amenity fee items, furnishing, fixtures and appliances and construction contingency) cost line items.

2. Rehab Minimum Hard Construction

OHFA has established a minimum hard construction cost per unit standard for rehabilitation developments of $20,000 per unit ($15,000 per unit for developments financed with tax exempt bonds).

3. Construction Interest

The maximum amount of the estimated Construction Loan Interest allowed in eligible basis is equal to one year of Construction Loan Interest (Construction Loan Amount multiplied by the Construction Loan Interest Rate).

Exceptions will be considered for developments that can justify a potentially longer construction period.

The applicant must provide a conditional commitment letter at final application detailing the rate and terms of all loans. If a Construction Loan Interest Rate is not represented in the application, OHFA will use the Prime Rate as published in the Wall Street Journal effective for the month in which the proposal application is received for non-competitive developments or the application deadline date for competitive developments.

4. Construction Contingencies

The maximum hard construction cost contingency is five percent for new construction and 10 percent for rehabilitation and adaptive reuse developments.

OHFA will use the definition of hard construction costs as defined in section C1 to calculate this amount.

OHFA may allow for exceptions to this limit if the applicant can demonstrate that another funding source requires a higher contingency.

5. Contractor's Cost Limits

Once the maximum amount of the contractor's fee is determined during the final application underwriting review, this amount cannot be increased if costs are higher but is also not required to be decreased if final hard construction costs are lower than underwritten.

Contractor Cost Limits are as follows:

Contractor Profit = six percent of hard construction costs
Contractor Overhead = two percent of hard construction costs
General Requirements = six percent of hard construction costs

OHFA will consider reasonable adjustments to these requirements, not to exceed 4%, for contractors that are not related parties.

6. Construction Cost Savings

If there are hard construction cost savings identified in the final cost certification, these savings will be shared among the contractor, developer and OHFA and may be added to the maximum Contractor Fee and Developer Fee amounts. For related party contractor-developer entities, the cost savings will be divided 50 percent to the contractor-developer and 50 percent to OHFA. For third party contractors, the cost savings will be divided 67 percent to the contractor/developer team, and 33 percent to OHFA. OHFA's share may be taken as cash, a reduction of credits or used to reduce the development's Gap Financing award, at the discretion of the Agency. Owners must contact OHFA prior to the request for IRS Form(s) 8609 to create a plan for the use of cost savings.

E. Professional Soft Costs

1. Professional Soft Costs

Professional Soft Costs are defined as the total of Architectural Fees, Survey Costs, Engineering fees, Appraisal, Market Study, Environmental Report, Rent-up and Marketing Costs; Title and Recording; Legal Fees; Accounting Fees; Developer's Fee and Overhead; Consultant Fees; Organizational Fees; Capitalized Asset Management Fees; and Syndication Expenses.

OHFA has the discretion to add other fees/costs listed in the 'Other' line items to the calculation as appropriate.

2. Professional Soft Cost Limits

Total professional soft costs, including the soft cost contingency, may not exceed 20 percent of the total development cost.

4% housing tax credit developments may have a total professional soft cost of 25 percent of the total development cost.

3. Professional Soft Cost Contingencies

The maximum soft cost contingency is two and a half percent of total professional soft costs.

4. Developer Fees

Developer fees are defined as the developer fee plus the total of all application or development consultant fees, construction management fees, guarantee fees, developer asset management fee and any financing fees charged by the developer. OHFA may add other fees to the calculation as appropriate.

Competitive Housing Tax Credit Developer Fee Calculation

The developer fee will be calculated based on the higher of the following:

a. $500,000 or;
b. 15 percent of total rehabilitation and new construction eligible basis; and
five percent of total acquisition eligible basis.

Developer Fees for competitive housing tax credit applications will be locked in at proposal application and may not be increased.

The maximum Developer Fee for any development will be $1,750,000.

Applications awarded competitive points for Exceptional Development Characteristics may have up to $50,000 of additional developer fee for each point earned.

Non-Competitive Housing Tax Credit Developer Fee Calculation

Twenty percent of the total rehabilitation and new construction eligible basis. Developer fees in excess of 15 percent must be deferred or put back into the development as a capital contribution and must be included in the sources of permanent financing.

Fifteen percent of the total acquisition eligible basis.

Non Housing Tax Credit Developer Fee Calculation

OHFA gap financing programs that are not paired with housing tax credits may claim a developer fee of 15 percent of the total development cost, unless guidance in the specific program guideline states otherwise.

All applications, in any program, that include a community based nonprofit developer may increase their developer fee by a maximum of $75,000. This amount must be received by the community based non-profit developer.

F. Reserves

1. Operating Reserves

The minimum Operating Reserve for a development is four months of the first stabilized year's projected operating expenses, hard debt service payments and replacement reserve contributions. The maximum is 12 months of the first stabilized year's projected operating expenses, hard debt service payments and replacement reserve contributions.

2. Replacement Reserves

Capitalized Prefunded Replacement Reserves are not permitted for new construction developments, with the exception of adaptive reuse developments and single family infill development properties intended for eventual tenant ownership.

Lease purchase properties may include a capitalized prefunded replacement reserve in the amount of up to $5,000 per unit. This reserve must be set aside in escrow to cover major capital expenditures prior to transitioning the home to the buyer. An additional $3,000 per unit may be set aside in escrow to cover closing costs. An inspection from an independent housing inspector approved by OHFA must be completed and provided to the Agency before reserves can be accessed.

OHFA's minimum replacement reserve amounts by product type are:

Senior New Construction = $250 per unit
Family / PSH New Construction = $350 per unit
Single-Family Homes = $300 per unit
Senior Rehabilitation = $350 per unit
Family / PSH Rehabilitation = $400 per unit

OHFA may permit an exception to these minimum replacement reserves if required by another funding source.

3. Special Reserves

If special reserves are required by HUD, RD, the lender(s) and/or the investor/syndicator, the applicant must provide supporting documentation that explains the requirement and defines the amount of time that the reserves will remain with the project. If documentation cannot be provided, OHFA will remove the special reserve from the development budget.

Special reserves are permitted for lease purchase developments for wheelchair lifts as an alternative to ramp requirements under visitability criteria. The special reserve must be reasonable and will be approved on a case by case basis.

II. Development Financing

A. All Sources Identified

All sources of financing must be identified, including housing tax credit equity, hard debt, gap financing, seller financing, soft or non-recourse loans, grants, development team contributions, interest during construction and reserves used to fund redevelopment. Applicants should contact OHFA for instructions on how to account for any unusual sources.

B. Commitment Letters

1. Equity Commitment

OHFA will evaluate the conditional equity commitment provided by the syndicator/investor at final application. Conditional equity commitments must include the following:

1. Proposed terms and conditions;
2. Net and gross equity and net equity pricing; and
3. Detailed pay-in schedule including equity pay-in during construction.

OHFA may require adjustments based on comparable, historical and/or current market conditions and trends.

2. Debt Financing

Conditional financial commitments for all debt sources must be submitted at final application for all developments seeking OHFA resources. OHFA will evaluate the terms of each funding source and may choose to underwrite at different terms for any funding source which OHFA determines will cause unnecessary or excessive subsidy.

If an applicant has not received final commitments at time of proposal, OHFA will underwrite the proposal application based upon market norms for the product type, development area and current market conditions as determined by OHFA.

3. Other Commitment Letters

All other sources identified in the application must include a conditional commitment letter at final application. Conditional commitment letters must identify the funding terms and conditions.

In the case of funding sources that involve a competitive process and have not yet announced awards, or the use of Federal or State Historic Tax Credits, OHFA may choose to allow additional time for applicants to submit a conditional commitment letter. OHFA will not present a development to the Multifamily Committee for approval until all conditional commitment letters are received.

C. Deferred Developer's Fee

Applicants must show that the deferred developer's fee can be paid in full from development cash flow within the first 15 years. Any remaining unpaid fee after year 15 will be deducted from the housing tax credit eligible basis and total development budget. If this results in a lower amount of eligible basis than can support the requested credit amount, the credits will be reduced accordingly.

III. Income and Expense Analysis

A. Income and Expense Overview

1. Operating Expense Reasonableness

OHFA will evaluate operating expenses by comparing the operating expenses to similar developments, based on construction type and region, in the Development Applications Cost Database.

Additional information will be required at the discretion of OHFA for developments that exceed budget categories based on the comparisons. Developments that cannot provide such information may be removed from consideration of funding.

Additional information will be required at the discretion of OHFA for developments that exceed one or more of the above comparisons. OHFA may reduce or increase a line item if an adequate justification is not provided and/or a cost is substantially above or below a reasonable, objective industry standard.

OHFA reserves the right to use other data sources to assess Operating Expense Reasonableness.

2. Vacancy

OHFA will assume a seven percent vacancy rate to calculate the effective gross income.

Applicants of preservation developments with project based rental subsidy may request a rate of five percent if they can document a history of strong occupancy rates.

Permanent supportive housing developments with project based rental subsidy for all units may elect to use a five percent vacancy rate.

3. Income/Expense Escalations

OHFA will assume an annual income increase of two percent and an annual expense increase of three percent.

Exceptions will be permitted for properties in which operating subsidy is provided by HUD, RD or the local public housing authority to achieve break-even operations at the property.

4. Lease Option Agreements

Counties, townships or municipal/non-profit corporations that are exempted from property taxes under the Ohio Revised Code and will option to lease the property on a long-term basis must submit a Lease Option Agreement for a minimum term of 35 years.

B. Expenses

1. Utility Allowances

For housing tax credit developments, utility allowances must be consistent with Section 42 of the IRC and IRS Regulation 1.42-10. Utility allowances should also conform to OHFA's Utility Allowance Policy.

For non-housing tax credit developments, utility allowances must come from a local utility provider, the local MHA/PHA, a third party engineer or HUD/RD. Utility allowances should also conform to OHFA's Utility Allowance Policy.

2. Syndicator Expenses

Reasonable investor/syndicator asset management fees will be permitted as either a capitalized development cost or a "soft" operating expense repaid from available cash flow, after amortizing permanent mortgages before deferred developer fee and soft loan repayments.

3. Service Coordination Expenses and Fees

Service coordination expenses and fees will be limited to $250 per unit per year.

Exceptions may be granted to permanent supportive housing developments, or developments that must have a higher service coordination fee based on a federal program requirement.

C. Income

1. Rental Income

All affordable units must maintain restricted rents that conform to IRC Section 42 and other applicable OHFA guidelines.

2. Commercial Income

Income from commercial space will not be considered in the cash flow analysis toward meeting Debt Coverage Reatio (DCR) or No-DCR requirements.

3. Other Income

Fees and other income such as laundry and parking must be reasonable and comparable to similar properties within the region and the developer's portfolio.

D. Debt Coverage Ratio

The minimum acceptable hard DCR is 1.20 for the first year of stabilized operations. Exceptions for the first year of stabilized operations may be considered where improved and upward trends in DCR are sustained over 15 years.

The development must maintain an annual DCR above 1.00 during the entire 15-year compliance period. For developments with no hard debt, the developments must maintain an annual income to expense ratio above 1.00 during the entire 15-year compliance period. The average hard DCR over the 15-year compliance period must not be greater than 1.5. The average income to expense ratio over the 15-year compliance period must not be greater than 1.5.

Exceptions may be made for Rural Development properties and developments that contain small amounts of hard debt. Developments seeking an exception must demonstrate a legitimate need.

E. Subsidy Layering Review

OHFA is designated to perform Subsidy Layering Reviews (SLR) on developments that propose to use new Section 8 Project Based Voucher (PBV) Housing Assistance Payments with housing credits. A full SLR application and fee must be sent on a separate disk with the final application. See the OHFA SLR Guidelines for details.

IV. Credit Calculation (Tax Credit Developments Only)

The amount of the housing tax credits and OHFA Gap Financing reserved will not increase after the proposal underwriting for 9% housing tax credit applications.

A. Tax Credit Percentage

The tax credit percentage will be determined according to IRC Section 42. The rate valid at application must be used to determine the credit request. The rate may then be locked the month the Binding Reservation Agreement is issued for competitive 9% credits or the month bonds are issued for tax-exempt bond developments.

Alternatively, applicants may elect to lock in the rate at the time the development is placed in service.

B. Eligible Basis

OHFA will review the eligible basis indicated in the application. All non-eligible costs will be deducted from eligible basis. OHFA may require a legal opinion from a qualified Tax Credit attorney, at the applicant's expense, for any items that are not clearly eligible under Section 42 of the IRC and applicable IRS guidance as determined by OHFA.

C. Acquisition Basis

OHFA will review the acquisition basis indicated in the application. Acquisition basis must conform to Section 42 of the IRC and applicable IRS guidance as determined by OHFA. The acquisition eligible basis cannot exceed the value of the property at or before the date of acquisition (defined as the date the deed or lease is recorded) as determined by the As-Is Appraisal of the property that complies with the Appraisal Requirements section in these guidelines.

The acquisition basis cannot exceed the value of the building(s) (total appraised value minus appraised land value) as indicated in the appraisal. If seeking an award of competitive housing tax credits, seller financing will not be included in eligible basis.

V. Development Changes

All major changes to a development require OHFA approval and will be reviewed by OHFA on a case-by-case basis.

OHFA reserves the right to reduce or revoke a reservation of housing tax credits if changes are made without prior approval, or if applicants fail to complete a development as approved. A new application, processing fee, public notification letters and competitive review may be required.

Failure to inform OHFA of any major changes in the applicant's situation or development structure at any time may cause the application to be rejected or the housing tax credit reservation to be revoked.

Ohio | Development Services Agency

Housing Rehabilitation Handbook

Part II

Residential Rehabilitation
Standards (RRS) and Commentary

2008 (updated December 2014)

John R. Kasich, Governor of Ohio
David Goodman, Director
Ohio Development Services Agency

STATE OF OHIO

RESIDENTIAL REHABILITATION STANDARDS

UPDATE – DECEMBER 2014

EXECUTIVE SUMMARY

The Office of Community Development (OCD) has revised the Residential Rehabilitation Standards (RRS) in order to provide greater flexibility for local program staff to address the needs of each assisted home, and to ensure that program funds are used in an efficient and cost-effective manner.

Working in collaboration with Rehabilitation Specialists and Program Managers representing housing grantees from across the state, OCD has revised the RRS to define the standards for rehabilitation, including adding new practices and addressing various programmatic concerns. The significant changes between this edition and previous editions are having greater distinction between what is a standard and what is commentary, an increase in the discretion of rehabilitation specialists regarding the scope of work, a chapter detailing lead-based paint standards, and updated appendices providing guidance on various rehabilitation practices. Specifically, the following changes were made:

- States that the general requirements of each chapter will be met, as defined at the beginning of each chapter.

- OCD expects each dwelling to meet the RRS standards which are appropriate and necessary given the condition of the dwelling, needs of the occupants, and the cost limitation of the program.
- Prioritization must be based on the seriousness with which the problems affect the health and safety of the occupant, the structural integrity of the dwelling and safety and adequacy of the electrical, plumbing and HVAC systems.

- All sub-standard conditions which threaten the health and safety of the occupant, the durability of the structure, and the safety and adequacy of the electrical, plumbing and HVAC systems shall be corrected. The most obvious and pressing substandard conditions are imminent health and safety hazards or serious structural deterioration. However, some substandard conditions are less obvious and judgment is needed to determine their adverse impact on the home and/or the occupant and to prioritize the need for correction.

- OCD also intends for the RRS to provide a framework for determining both the scope and quality of all new and repair work to be done under OCD-funded housing programs and to set guidelines for the use of other building codes that must be followed in the completion of that work.

- References to specific years of publication/adoption have been removed, as well as references to specific chapters, articles, sections, and citations; and OCD expects the use of most recent State of Ohio adopted versions of the International Property Maintenance Code and various building codes which are generally related to “new construction” such as:

    - *Residential Code of Ohio*
    - *Ohio Building Code*
    - *Ohio Plumbing Code*
    - *Ohio Mechanical Code*
    - *National Electric Code (NFPA 70)*
    - *International Energy Conservation Code*
    - *International Fuel Gas Code*

- Clarifies OCD’s expectations regarding a grantee’s responsibility to comply with existing walk-away policies, and OCD’s expectations regarding a grantee’s responsibility to provide consistent and fair assistance to clients, while understanding that rehabilitation is designed to make the whole house safe, healthy and durable.

- Updates the definition of a “shall” from being an item that must be completed, to the following: *This term will designate that when the item is completed, it shall be in compliance to the applicable code or standard.*

- Mandates the use of the Property Inspection List – Appendix 1-A for all rehabilitation projects.

- Updated Appendices.

Table of Contents

Chapter	Contents	Page
	Introduction	
Chapter 1	**Administration**	1
1.1	Intent of the RRS, Rehabilitation, Repair and New Construction	1
1.2	Scope of the RRS	3
1.3	Authority	5
1.4	Enforcement	7
1.5	Effective Date	7
1.6	Revisions	7
1.7	Classifications of Measures	8
1.8	Qualifications and Workmanship	11
1.9	Material Standards	12
Chapter 2	**Building Structure**	13
2.1	Foundations, Basements, Crawl Spaces and Cellars	13
2.2	Floor Construction, Framing and Sub-Floors	18
2.3	Wall Construction	19
2.4	Windows and Doors	22
2.5	Roof and Ceiling Construction, Attics and Roof Drainage	23
2.6	Building Shell Energy Efficiency	26
2.7	Attached Structures: Exterior Porches, Balconies, and Uninhabitable Additions	33
2.8	Interior and Exterior Stairs	34
2.9	New Construction	34
2.10	Modular, Manufactured and Mobile Homes	35
2.11	Green Building	35
Chapter 3	**Heating, Ventilation and Air Conditioning Systems**	38
3.1	Source of Heat	38
3.2	Chimneys and Fireplaces (Solid Fuels)	38
3.3	Chimneys and Vents (Natural Gas, Propane Oil)	39
3.4	Heating Equipment (All Fuels)	40
3.5	Equipment Inspections	43
3.6	Cooling Equipment (Air Conditioning)	44
3.7	Heating and Cooling Distribution System	44
3.8	Water Heater Equipment (All Fuels)	46
3.9	Fuel-Gas Piping	48

Chapter	Contents	Page
Chapter 4	**Electrical System**	49
4.1	Work Execution Standards	49
4.2	Grounding and System Protection	53
4.3	Service Entrance and Equipment – Main Panel Distribution Center	54
4.4	Branch Circuits	57
4.5	Premises Wiring	58
4.6	Receptacles	60
4.7	GFCI Protection	63
4.8	Lighting Fixtures	63
4.9	Smoke Detectors	65
Chapter 5	**Plumbing**	66
5.1	Inspection and Repair Requirements	66
5.2	Water Supply	67
5.3	Plumbing Fixtures	71
5.4	Sanitary Drainage	73
Chapter 6	**Environment**	76
6.1	Premises and Dwelling Condition	76
6.2	Lighting, Ventilation and Occupancy Limitations	82
6.3	Habitable Spaces	84
6.4	Occupiable Spaces	85
6.5	Accessibility	87
6.6	Fire and Carbon Monoxide Safety	87
6.7	Occupant Health	89
6.8	Historic Preservation	91
6.9	Flood Plain Management	91
Chapter 7	**Elimination of Lead-Based Paint Hazards**	93
7.1	General Conditions	93
7.2	Program Personnel Requirements	94
7.3	Procedural Protocol	95
7.4	Specifications	97
7.5	Qualifications of Contractors and Employees	99
7.6	Documentation	101

Appendices

Appendix 1-A	Property Inspection List
Appendix 2-A	Energy Audits
Appendix 2-B	Calculations for Determining Seasonal Heat Loss and Payback
Appendix 3-A	Combustion Testing Procedures
Appendix 3-B	Inspection and Testing Procedures for all appliances Natural Gas or Liquid Petroleum
Appendix 3-B 1	Inspection and Testing Procedures for Electric Furnaces and Electric Heat Pumps
Appendix 3-B 2	Inspection and Testing Procedures for all appliances that burn Fuel Oil
Appendix 3-B 3	Inspection and Testing Procedures for Solid Fuel Furnaces and Stoves
Appendix 3-C	Cooling Equipment Inspection Requirements
Appendix 3-D	Water Heater Inspection Requirements
Appendix 3-E	Guidelines for Sizing Water Heaters and Calculating Payback
Appendix 4-A	Electric Receptacle and Fixture Location Requirements
Appendix 5-A	Guidelines for Sizing Plumbing Supply Lines
Appendix 5-A 1	Table – Water Demand of Fixtures and Fixture Groups in Gallons per Minute
Appendix 5-A 2	Table-Pipe Sizing Based on Velocity Limitation
Appendix 7-A	Lead-Based Paint Requirements and Guidance
Appendix 7-B	Contractor Occupant Protection Plan/Risk Analysis
Appendix A	Summary of Inspection and Testing Requirements
Appendix B	Abbreviations
Appendix C	Definitions
	Index

INTRODUCTION

BACKGROUND

The Office of Community Development (OCD) developed the Residential Rehabilitation Standards (RRS) as the primary document for identifying and correcting sub-standard conditions in homes being rehabilitated by grantees participating in OCD-funded housing programs. The RRS combines OCD rehabilitation program policy with recognized codes and standards. This document is intended to clarify OCD's expectations for rehabilitation while promoting safe, healthy, durable, energy efficient, affordable, and habitable housing for Ohio's low- to moderate-income population.

PURPOSE OF THIS UPDATE

OCD has revised the RRS in order to provide greater flexibility for local program staff to address the needs of each assisted home, and to ensure that program funds are used in an efficient and cost-effective manner.

Working in collaboration with Rehabilitation Specialists and Program Managers representing housing grantees from across the state, OCD revised the RRS to define the standards for rehabilitation, including adding new practices and addressing various programmatic concerns. The significant changes between this edition and previous editions include: a greater distinction between what is a standard and what is commentary, an increase in the discretion of rehabilitation specialists regarding the scope of work, a chapter detailing Lead-Based paint standards, and updated appendixes providing guidance on various rehabilitation practices.

READER ADVISORY

OCD advises grantees that the RRS should not be viewed as the only resource necessary for rehabilitation work. The RRS does not describe all of the codes, standards and practices which apply to rehabilitation. Also, the ability to produce quality rehabilitation work presumes an acceptable level of knowledge and/or experience. Therefore, OCD expects Rehabilitation Specialists to have copies of the various codes and standards referenced in the RRS, and a working knowledge of how to meet them.

OCD encourages the reproduction and distribution of the RRS so that local program administrative staff, contractors, local code officials, and other parties actively involved in rehabilitation have copies. Readers are advised to consider the value of the information noted in the commentaries as well as the requirements noted in the standards. Personnel who have questions about the RRS should seek clarification from OCD, or further research the codes and standards referenced in the RRS. As mentioned above, the RRS does not provide sufficient detail to describe the techniques and materials needed to meet the standards, or provide a standard for every deficiency in a property. In some cases, grantees will need to apply other standards or use their qualified judgment based on practical experience and a sound interpretation of the RRS.

CHAPTER ONE

ADMINISTRATION

GENERAL REQUIREMENTS

Chapter one, administration, is intended to provide a framework for the use of this document, the **Residential Rehabilitation Standards (RRS)**. This chapter outlines the basic information needed to understand why it was developed, what is the documents purpose, scope and structure, and when, where and how it is to be used.

1.1 INTENT OF THE RRS, REHABILITATION, REPAIR AND NEW CONSTRUCTION

1.1.1 THE INTENT OF THE RRS AND REHABILITATION

Standard: The intent of the RRS is as follows:

a. To establish standards and requirements to which each rehabilitated dwelling **shall** comply.
b. To establish standards and requirements to which each newly constructed house and addition **shall** comply.
c. To establish standards and requirements for how all new and repair work **shall** be done.
d. To promote sound rehabilitation, construction, and repair practices and greater consistency among the Office of Community Development (OCD) grantees.

Commentary: It's OCD's intention, based on testing and inspection requirements, that every rehabilitated residence will meet the general requirements as defined at the beginning of each chapter, and that work measures performed shall be to the standard outlined in the relevant chapter. However, OCD acknowledges that other documents, including local codes and the codes referenced within the RRS, will need to be applied to rehabilitation projects when items are installed as new. OCD expects each dwelling to meet the RRS standards which are appropriate and necessary given the condition of the dwelling, needs of the occupants and the cost limitation of the program.

Prioritization must be based on the seriousness with which the problems affect the health and safety of the occupant, the structural integrity of the dwelling and safety and adequacy of the electrical, plumbing and HVAC systems.

All sub-standard conditions which threaten the health and safety of the occupant, the durability of the structure, and the safety and adequacy of the electrical, plumbing and HVAC systems shall be corrected. The most obvious and pressing substandard conditions are imminent health and safety hazards or serious structural deterioration. However, some substandard conditions are less obvious

and judgment is needed to determine their adverse impact on the home and/or the occupant and to prioritize the need for correction.

OCD also intends for the RRS to provide a framework for determining both the scope and quality of all new and repair work to be done under OCD-funded housing programs and to set guidelines for the use of other building codes that must be followed in the completion of that work.

- Regarding the application of codes to existing houses, OCD has based the RRS on a combination of all applicable chapters and sections of the most recent State of Ohio adopted versions of the International Property Maintenance Code and various building codes which are generally related to "new construction" such as:

    - Residential Code of Ohio
    - Ohio Building Code
    - Ohio Plumbing Code
    - Ohio Mechanical Code
    - National Electric Code (NFPA 70)
    - International Energy Conservation Code
    - International Fuel Gas Code

While a housing maintenance code is appropriate for setting standards for safe, sanitary and decent housing, a maintenance code fails to set specific standards governing the repairs. Building codes, on the other hand, set the standards for the repair work and, accordingly, are appropriate for rehabilitation. For example, building codes can be used as the installation standard when an item is being replaced or upgraded and therefore, can be installed as though it were "new" (e.g. a new roof, a new furnace, or portions of an electrical system). However, OCD recognizes that for existing houses, it may not be appropriate for building codes to be used as the sole basis for identifying sub-standard conditions or as the sole standard for rehabilitation work. Furthermore, OCD does not expect that the entire dwelling or system will comply with "new construction" codes, but rather that the rehabilitation work done to a dwelling or a system will, where feasible, comply with the referenced codes.

The RRS seeks to span the purpose of these two types of documents. It is designed to set standards regarding what is sub-standard and needs to be addressed that will be used in developing the scope of the work to be completed (much like a property maintenance code), and also sets the standards for how the work will be done (much like a new construction code).

Although the RRS is comprehensive, it is not OCD's intent that it can substitute for a detailed inspection guide, work specification or performance manual. Also, it is not OCD's intent that familiarity with the RRS can substitute for formal training or sound judgment based on practical experience.

The intent of OCD-funded rehabilitation is to correct sub-standard conditions with Ohio's existing housing stock so that dwellings are safer, healthier, more durable, more affordable, more energy efficient and more habitable. Rehabilitation must correct a broad range of conditions that afflict the target housing stock. Rehabilitation needs to address more than those conditions that threaten the immediate "health and safety" of the occupants. It also needs to consider conditions that will create a future hazard, that make the dwelling less useful and

less affordable to the occupant, and that reduce the dwelling's long-term habitability. This broad objective will require a thorough inspection of the dwelling's structural and mechanical systems, an assessment of the occupant's critical needs and, in some cases, an assessment of the dwelling's visual impact on the neighborhood.

1.1.2 THE INTENT OF HOME REPAIRS

Standard: The intent of OCD-funded home repair **shall** be to correct one or two significant problems that adversely affect occupant health, safety, and or structural integrity. The types of work that **should** generally be considered eligible to be done through the home repair activity include structural system repairs, mechanical system repairs, plumbing system tap-ins, wells, septic systems, weatherization, accessibility, and lead-based paint hazard reduction. All work completed through this activity **shall** meet the applicable standards as outlined in the RRS.

1.1.3 THE INTENT OF NEW CONSTRUCTION

Standard: The intent of new housing construction **shall** be to create new permanent housing to expand the supply of low-income owner occupied or renter occupied housing stock, and **shall** ensure that these houses will be safe, healthy, structurally and mechanically sound, affordable, and energy efficient. The RRS **shall** also ensure that all houses built through this activity **shall** meet the same, appropriate housing codes and standards wherever, and by whomever the houses are built.

1.2 SCOPE OF THE RRS

1.2.1 WHAT CODES APPLY

Standard: Grantees operating housing rehabilitation, home repair, or new construction programs or activities in jurisdictions that have not adopted a housing or building code **shall** comply with the provisions of the RRS. Grantees operating housing rehabilitation programs in jurisdictions that have adopted a housing or building code **shall** comply with those provisions of the RRS that are more rigorous than the adopted codes. The RRS **shall** supersede those provisions of the local codes that are less safe, less effective or less comprehensive than the RRS.

Commentary: A community that has not formally adopted a housing or building code (and therefore does not have a document for identifying sub-standard conditions and establishing the codes and standards for construction, rehabilitation, and or repair work) must use the RRS. In other words, the RRS will, in effect, become the housing standard and will establish applicable codes for those communities which have not established one for themselves. A community which has adopted a housing code, such as the **International Property Maintenance Code (IPMC)** and/or building codes such as the **Residential Code of Ohio (RCO)** and the **National Electric Code (NEC)**, must use those local codes in conjunction with the RRS for their new construction, rehabilitation, and home repair programs; for

each specific item or detail required by one of the codes or standards, the more restrictive code or standard must prevail.

1.2.2 REQUIREMENTS WHEN ITEMS ARE NOT SPECIFICALLY ADDRESSED WITHIN THE RRS

1.2.2.1

Standard: Regardless of whether each of the items covered by one of the following principles are explicitly addressed in the standards of the RRS, each of the following **shall** apply to each house to which the RRS applies (See 1.7. for a definition and proper use of the word **shall**):

a. All critical health and safety items, which pose the possibility of death or more than a remote possibility of a critical health issue from long or short term exposure by one or more of the occupants, **shall** be addressed.
b. All items that pose a risk to one or more of the occupants, even though it is minimal, because of likely contact on a several times a week basis **shall** be addressed.
c. All items that threaten the integrity of the house, because failure to replace will lead to deterioration, collapse, or other failure of a housing component **shall** be addressed.
d. All items that must be done to ensure that all new work complies with the applicable building codes **shall** be completed.
e. All items that are necessary for basic sanitation and privacy **shall** be completed.

1.2.2.2

Standard: Regardless of whether each of the items covered by one of the following principles are explicitly addressed in the standards of the RRS, each of the following **should** apply to each house to which the RRS applies (See 1.7. for a definition and proper use of the word **should**):

a. All items that are health and safety related and not covered in 1.2.2.1 above **should** be completed.
b. All items that substantially improve the affordability of the housing for the occupants **should** be completed.
c. All items that substantially improve the comfort of one or more of the occupants **should** be completed.
d. All items that, if not addressed, may lead to minor deterioration of the house or minor unsanitary conditions within the house **should** be completed.
e. All items that are a means of saving costs, while accomplishing the goals of 1.2.2.1 above **should** be done.

1.2.3 ADDITIONAL WORK AND/OR ALTERNATIVE APPROACHES

Standard: The RRS is not intended to identify all of the standards to which a dwelling must comply, and therefore applies the principles outlined in 1.2.2 above. Grantees

are allowed to apply alternative standards or practices. However, the alternative standards or practices **shall** be recognized as safe, effective and no less rigorous than those identified in the RRS. Also see section 1.7 for related information.

Commentary: Because housing rehabilitation is complex, OCD realizes that the RRS cannot identify every problem that may exist or set a standard for every part of a home. Also, OCD understands that rehabilitation work cannot always strictly comply with the referenced codes and alternative standards or methods may be applied, as long as the alternatives achieve satisfactory results. Where the RRS fails to adequately address something that, in the judgment of the grantee, constitutes a real problem to be corrected, OCD encourages grantees to apply another recognized code or standard.

OCD expects grantees to comply with existing walk-away policies. In addition, OCD expects grantees to provide consistent and fair assistance to clients, while understanding that rehabilitation is designed to make the whole house safe, healthy and durable.

1.3 AUTHORITY

1.3.1 GRANTEE OBLIGATIONS AND WAIVER PROVISIONS

Standard: Grantees **shall** ensure that the provisions of the RRS are applied to each dwelling that is constructed, rehabilitated, or repaired with financial assistance provided in whole or in part from OCD.

Commentary: Primary responsibility for ensuring compliance with the RRS rests with the grantee. OCD expects each grantee to apply the RRS to the best of their ability on each rehabilitation project. Because the RRS is OCD's housing rehabilitation standard, the RRS applies to all rehabilitation projects receiving financial assistance from OCD.

OCD realizes that grantees must be able to take into consideration the relative seriousness of the conditions and the cost of the repairs in order to decide what is necessary and feasible. OCD also realizes that grantees often must consider the owners input. However, owner input cannot be allowed to prevent compliance with the RRS

1.3.2 COORDINATION WITH WORK OF OWNERS AND OTHER AGENCIES

Standard: Grantees **shall** ensure that any required construction, rehabilitation, or repair measure installed by an owner, occupant or other agency or program, is completed in a manner consistent with the RRS and is completed prior to considering the rehabilitation project finished.

Commentary: Occasionally, materials are installed by the homeowners themselves or some items on the rehabilitation work specifications are completed in coordination with another agency or program (e.g. insulation to be installed by another federally-

funded program). While OCD encourages coordination with other programs and homeowners, OCD still expects the entire rehabilitation project to comply with the RRS when it is completed. This means that the work must be properly done and that it must be finished before the rehabilitation project is considered complete. A promise or referral with the intent to do work is not acceptable. Instead, OCD expects grantees to inspect the work to ensure that it was done and done correctly. Otherwise, there is no assurance that the home meets the RRS requirements.

1.3.3 WALK AWAY POLICY COMPLIANCE

Standard: Dwellings that cannot be made to comply with the provisions of the RRS within the parameters of the grantee's "walk-away" policy **shall** not be rehabilitated.

Commentary: The OCD Housing Rehabilitation Handbook requires each grantee to establish a "walk-away" policy. The purpose of the "walk-away" policy is to prevent investment in a home which is so deteriorated that compliance with the RRS cannot be achieved within the grantee's limit of financial assistance. While it may be difficult to declare a home a "walk-away", it is sometimes necessary. If the cost of the OCD-funded work exceeds the grantee's limit, and no supplemental sources of financial assistance are available, rehabilitation must not be attempted.

1.3.4 COORDINATION WITH BUILDING OFFICIALS

Standard: Grantees operating housing rehabilitation programs in jurisdictions that have housing code inspection officials, and/or operating new construction, rehabilitation, or repair programs in communities that have existing building departments and building code inspection officials **shall**, to the extent practicable, coordinate the initial inspection, the preparation of the work specifications and the final inspection with the appropriate local code inspection officials.

Commentary: Coordinating with code officials (e. g. making sure that the scope of work will meet local codes, covering any questions regarding local codes with them prior to beginning work, and making sure that they have signed off on the local codes prior to paying the contractor) is a good way to add authority and expertise to the rehabilitation process. Also code officials who are experienced in overseeing electrical, plumbing and HVAC work can detect deficiencies with system design and workmanship.

Code official participation in the rehabilitation process, especially early on, can help prevent subsequent problems with code compliance and work quality. Developing a working relationship with code officials can also be critical when alternative methods for achieving code compliance is needed.

1.4 ENFORCEMENT

Standard: Grantees are contractually obligated to comply with the provisions of the RRS. Failure to comply with the RRS and/or failure to follow the actions required by OCD to correct the non-compliance **shall** be considered a violation of the grant agreement. Continued non-compliance and/or continued failure to follow the corrective actions **shall** be considered grounds for OCD to modify, suspend or terminate the grant agreement.

Commentary: Because compliance with the RRS is stipulated in the grant agreement between OCD and the grantee, OCD reserves the right to enforce compliance through the terms and conditions of the grant agreement. Grantees must know that OCD can require them to return to a project and correct deficiencies or require other actions to enforce compliance. Repeated non-compliance can result in OCD evoking those clauses of the grant agreement which allow OCD to restrict the grantee's program operation or funding.

1.5 EFFECTIVE DATE

Standard: The latest edition of the RRS **shall** become effective for jurisdictions with an Ohio Development Services Agency grant which begins on or after the effective date noted on the RRS title page.

Commentary: This means that dwellings being constructed, rehabilitated, or repaired under grants awarded on or after the effective date must comply with the latest edition of the RRS. OCD believes that linking the effective date and the grant award date is the fairest way for jurisdictions to implement changes contained in revised editions. Dwellings being constructed, rehabilitated, or repaired under grants awarded before the effective date are not retroactively subject to the latest edition of the RRS. However, OCD encourages grantees to apply the latest edition of the RRS to dwellings being rehabilitated under existing grants if the grantee determines that it is feasible to do so. It is up to the grantee to adequately document which version of the RRS they have adopted for each project.

1.6 REVISIONS

Standard: The RRS can be revised to reflect changes in state or federal program policies and/or regulations, changes to the codes referenced in the RRS or changes in rehabilitation techniques and materials.

Revisions due to changes in state or federal program regulations or significant changes to the referenced codes **shall** become effective immediately upon written notification from OCD. Revisions due to changes in OCD program policies or changes in rehabilitation techniques and materials **shall** be open to grantee review and comment before becoming effective.

Commentary: OCD intends to periodically revise the RRS to stay current with technical and programmatic changes. Changes initiated by government regulation or law, or by code authorities are effective immediately. Changes initiated by OCD become effective, as appropriate, after grantees have had the opportunity to review and comment on the proposed changes.

1.7 CLASSIFICATIONS OF MEASURES

1.7.1 PRIORITIZATION AND CATEGORIZATION OF STANDARDS

Standard: The RRS seeks to set priorities for the scope of work to be completed in the construction, rehabilitation, and repair of houses, and to determine how the work is to be completed. Therefore, the RRS will make use of the following terms in the standards, which will be bolded in the standards, and which **shall** have explicit meanings as defined below. The following definitions **shall** be applied to the terms use in each standard, and each standard's meaning **shall** be construed consistent with the following definitions:

Shall: This term will designate that when the item is completed, it should be in compliance with the applicable code or standard.

Should: This term will designate items that are recommended to do when feasible, and when funds allow.

Shall Not: This term will designate items explicitly prohibited from being done as a part of the scope of work on any project.

1.7.2 REFERENCED CODES

Standard: The following housing and building codes are currently in effect in the State of Ohio, and will be the primary codes referenced in the RRS. Other codes used will be identified explicitly in the text. References not withstanding, the code(s) applicable to the specific project must be utilized. Each rehabilitation specialist responsible for developing the scope of work and/or conducting inspections on projects funded in whole or in part by OCD **shall** have access to the RRS and to each of the most recently adopted by the State of Ohio versions, of the following codes:

- International Property Maintenance Code
- Residential Code of Ohio
- Ohio Building Code
- Ohio Plumbing Code
- Ohio Mechanical Code
- National Electric Code
- International Energy Conservation Code
- International Fuel Gas Code

1.7.3 SUB-STANDARD CONDITION

Standard: All individual work items conducted through the OCD programs **shall** accomplish one or more of the following, and items that do not address one or more of the following **shall not** be completed. Needs that can be addressed by completing one or more of the following are considered to be sub-standard conditions (also see 1.7.4 & 1.7.5):

a. Meet the health and safety needs of the occupants.
b. Make an improvement to the affordability of the housing for the occupants.
c. Improve the comfort of one or more of the occupants.
d. Improve the accessibility of the housing elements for one or more of the occupants.
e. Meet basic needs for privacy.
f. Address a critical need for storage, work, or living space.
g. Protect the integrity of the house or bring the house into compliance with applicable codes.
h. Improve the physical appearance of the neighborhood in a way that can possibly lead to community redevelopment (requires work to multiple houses in the immediate neighborhood).

Commentary: This standard is designed to provide guidance on the threshold for when an item may be done. For example, some substandard conditions are incipient problems like an antiquated electrical system or old corroded water supply lines, which will become serious problems sooner or later, even though functional and installed according to the code in effect at the time. Other substandard conditions are deficiencies like no insulation or an old inefficient heating system which, though not code violations or safety hazards, are nevertheless problems that make a home less comfortable and affordable. These types of substandard conditions are allowed to be done under the RRS based upon the judgment of the grantee.

1.7.4 AMENITY

An amenity is an unnecessary item or measure intended solely for convenience or increasing property value that does not directly relate to or result from correcting a sub-standard condition as defined in 1.7.3. Amenities **shall not** be addressed for projects funded or partially funded through OCD.

Commentary: Unlike a measure which corrects a sub-standard condition, an amenity is an alteration or a remodeling which does not eliminate a hazard or remedy a problem (see 1.7.3). In the context of rehabilitation, amenities are unnecessary improvements made for their own sake rather than as a result of doing purposeful rehabilitation work. Installing a satellite TV dish or turning a basement into a recreation room are clear examples of unnecessary and unacceptable work. However, sometimes measures that ordinarily would be considered an amenity may be acceptable if they are part of doing real rehabilitation work.

For example, in the course of replacing sub-standard plumbing and structural systems in a bathroom, moving the plumbing fixtures to more efficiently use a limited space is acceptable. Or, in the course of upgrading an electrical system, adding receptacles to increase convenience is acceptable.

1.7.5 COSMETIC IMPROVEMENT

A cosmetic improvement is an unnecessary item or measure intended to solely enhance visual appearance or perceived value. A cosmetic improvement is also an unnecessary enhancement to an existing adequate condition, or an item that unnecessarily exceeds the standard specification for correcting a sub-standard condition. Cosmetic improvements **shall not** be addressed for projects funded or partially funded through OCD.

Commentary: Cosmetic improvements are items or measures designed solely to embellish or add unnecessary decoration. Cosmetic improvements often have nothing to do with correcting sub-standard conditions.

Painting and wallpapering for the purpose of re-decorating or replacing exterior siding simply to change color or style are clear examples of this kind of cosmetic improvement. Sometimes rehabilitation work can lead to cosmetic improvements if excessive enhancement occurs. Replacing a defective bathroom floor covering with marble tile when vinyl sheet goods is the standard material is a clear example of that kind of unacceptable cosmetic improvement.

That is not to say that houses with completed work are to be visually unappealing. Many times, in conducting work to meet sub-standard conditions, improvements to the physical appearance will result. Cleaning up garbage and rubbish; scraping and repainting over alligatored, peeling paint (done in a lead-safe manner); and repairing deteriorated exterior steps are all examples of this. These types of improvements, when done to several houses on a block, can improve the appearance of a neighborhood. They can also potentially, in conjunction with other activities, lead to the desired outcome of community redevelopment.

OCD expects grantees to focus rehabilitation on correcting sub-standard conditions and to avoid doing work that is classified as amenities and cosmetic improvements. This means that OCD-funds can only be used to correct sub-standard conditions. OCD recognizes that clear distinctions between the three classifications of measures cannot always be drawn and that grantees must sometimes carefully consider and justify some measures. Having written justification in client files, along with documentation such as photographs is helpful in providing OCD with the information that they need to understand the choices made. OCD encourages grantees to establish policies to help ensure that rehabilitation, not remodeling and re-decorating, is the result of the program. OCD also encourages grantees to educate owners and occupants about the intent of the rehabilitation program.

1.7.6 PROPERTY INSPECTION LIST

Standard: For all projects involving rehabilitation, the grantee **shall** use the Property Inspection List* found in Appendix 1-A of the RRS. The property inspection list must be completed prior to developing the scope of work and must be maintained in the project file. *Substitute with the Uniform Physical Condition

Standards checklist if the project requires a Real Estate Assessment Center (REAC) Inspection.

Commentary: Utilizing the property inspection list will ensure that deficiencies are prioritized in a manner that ensures the most critical health and safety issues are addressed. The property inspection sheet prompts the grantee to categorize deficiencies as "Level 1", "Level 2" or "Level 3". Deficiencies categorized as "Level 3" are assigned top priority and must be addressed as a part of the rehabilitation. Deficiencies categorized as "Level 2" must be addressed prior to addressing deficiencies categorized as "Level 1". Grantees, based upon project costs and available funds, will have flexibility in addressing deficiencies categorized as "Level 1". Thoroughness of the inspection of each potential rehabilitation project, as well as an understanding of the specific needs of the household is important; as similar deficiencies may be categorized at different levels based upon the lifestyle of the client. For example, an inspection may reveal that a bedroom containing only one wall receptacle has extension cords being utilized to power multiple electronic devices. The overloading of the lone receptacle is a health and safety concern that would be categorized as a "Level 3". Alternatively, a bedroom in another home might have only one receptacle, but because the homeowner does not use that bedroom for anything other than a spare room, and no receptacle overloading is observed, the deficiency is more of an inconvenience instead of a health and safety issue, and might be categorized as a "Level 1".

1.8 QUALIFICATIONS AND WORKMANSHIP

1.8.1 USING QUALIFIED STAFF, INSPECTORS, AND CONTRACTORS

Standard: Grantees **shall** ensure that all persons involved in applying provisions of the RRS to a rehabilitation project **shall** be qualified for their tasks. If an owner or an occupant performs rehabilitation work, the grantee **shall** ensure that the person is qualified. If the nature of the work requires personnel to be licensed or otherwise certified to perform the work, the grantee **shall** ensure that the personnel meet the requirements.

Commentary: Qualifications can be reviewed in a number of ways. Specific, documented experience, documented training and education, licensure or certification, previous personal knowledge of work quality, references, and a review of previous projects are all ways to determine whether a person or organization is qualified to carry out a specific role in a project. Grantees must use a mix of these to determine whether a person or organization is qualified for a specific task. Grantees must also monitor work quality on an ongoing basis, and remove persons from the program that are not adequately performing.

1.8.2 ENSURING QUALITY WORK

Standard: Grantees **shall** ensure that the mechanical execution of the rehabilitation work is performed in a manner consistent with principles of quality workmanship, the

material manufacturer's installation instructions, applicable codes and current accepted industry practice.

Commentary: Employing qualified and experienced people is critical to the success of a rehabilitation project. Establishing sound procedures and clear standards and using quality materials aren't enough if technicians don't know what they're doing, no matter how well intentioned they may be. OCD expects grantees to have a procedure to ensure that the people responsible for inspecting homes, preparing work specifications and actually doing the rehabilitation work are qualified and experienced. This is particularly important for work in the electrical, plumbing and HVAC trades. OCD requires that technically demanding work be done by people who demonstrate competency in that type of work.

In addition, work involving some types of materials, such as those containing lead-based paint and asbestos, generally requires licensed personnel.

1.9 MATERIAL STANDARDS

1.9.1 NEW MATERIALS

Standard: New material **shall** be of appropriate quality, **should** be specified by the grantee in the specifications, and **shall** meet the specifications established by the referenced codes and the nationally recognized authority for the type of material installed.

1.9.2 USED MATERIALS

Standard: Used material **shall not** be installed unless the material is sound, safe, and effective. All used material **shall** be identified in the specifications and approved by the homeowner and the grantee prior to its use. OCD encourages the use of used material within the above parameters where it will conserve natural resources (Also see the RRS 2.10).

Commentary: OCD expects rehabilitation materials to be safe, effective and durable. At a minimum, materials must meet the manufacturing and performance specifications established by the various nationally recognized trade associations and testing laboratories such as; UL, ASTM, ANSI, GAMA, etc. OCD also expects materials to be appropriate to their application. For example, materials rated for interior use only are not acceptable for exterior use. It is acceptable to reuse materials provided the materials are of acceptable quality, sound and functional.

CHAPTER TWO

BUILDING STRUCTURE

GENERAL REQUIREMENTS

The building structure, including the foundation and the framing, are responsible for providing the most basic elements of a house. To be effective, the building structure must accomplish the following:

- be structurally safe and sound;
- adequately protect the occupants and the building components from exterior moisture, wind, heat and cold;
- provide for the safe entry of adequate sunlight and fresh air into the building envelope;
- provide for the safe exit of moisture and other contaminates out of the building envelope;
- provide a means of conserving energy and of keeping energy costs affordable; and
- provide for an adequate means of egress to allow all occupants a quick and safe exit from the building.

The structural components and the building envelope that are covered in this chapter are vital to the health and safety of the occupants and their failure generally makes the house uninhabitable. The integrity and proper operation of many of the other systems of the house are also dependent on the integrity of this system. For example a leaking roof can lead to infiltration of water, which may not only destroy the structural components of a house, but can lead to severe moisture and air quality issues inside the house.

2.1 FOUNDATIONS, BASEMENTS, CRAWLSPACES AND CELLARS

2.1.1 INSTALLATION OR REPLACEMENT OF FOUNDATIONS

Standard: The installation of all new basement, crawlspace and slab-on-grade foundations or portions of a foundation and all foundation repairs **shall** be in accordance with the applicable sections of the RCO. Where bracing of existing walls is an appropriate measure, the repair **shall** be designed in a manner to safely support the loads that will be imposed. New crawlspaces built through the CHIP program **should** be of the enclosed conditioned kind, as outlined in the RCO.

2.1.2 CONCRETE, STONE, TILE, OR MASONRY FOUNDATION WALLS

2.1.2.1

Standard: **Continuous foundation wall:** All houses **should** rest on a continuous foundation wall.

In cases where a continuous foundation wall is not possible, the foundation structure **shall** be adequate to support the loads imposed, and **shall** provide adequate protection from frost and from the infiltration of vermin into the structure.

2.1.2.2

Standard: **Footing:** All foundation walls **should** rest on an adequate footing that extends below the frost line or is otherwise protected from frost.

Commentary: Sometimes in older houses inadequate footing depth results in movement of a portion of a house during freeze-thaw cycles. An example of this would be on an old house where the porch has been made into a room and the door is pushed out of square by the movement of the shallow foundation during the freeze-thaw cycles. The force of this movement can be considerable and can destroy doors and other building components over time. Replacement of these components without addressing the underlying problem will only result in the new components also being destroyed. There are a number of ways to deal with shallow foundations. For example, the foundation can be dug up and rebuilt, pylons can be pushed into the ground extending below the frost line to provide support for the foundation, the level of the earth next to the foundation can be raised, or the foundation can be insulated in some way. Each of these methods may be viable and cost effective alternatives for specific situations.

2.1.2.3

Standard: **Structurally Sound:** Basement and crawlspace walls **shall** be structurally sound and without missing or deteriorated masonry, lintels or severely deteriorated mortar joints which weaken the foundation's ability to safely support the load. Serious deterioration or other observable structural defects that threaten the structural integrity of the foundation and the durability of the dwelling including collapsed or severely leaning sections of the foundation wall, missing bricks, stones or blocks, large cracks or holes through the foundation wall, severely eroded mortar joints, etc. **shall** be corrected. Repairs **shall** comply with RRS Section 2.1.1.

Commentary: OCD recognizes that many older homes have foundations that are, to some extent, deteriorated or otherwise sub-standard. OCD does not expect that all of the problems (or the causes for the problems) can be fully corrected. However, as noted above, appropriate measures to address serious problems must be taken, as necessary. Examples of such measures include replacing weakened or collapsed wall sections, installing permanent structural bracing, replacing missing or deteriorated components, tuck pointing and parging.

2.1.2.4

Standard: **Mortar joints:** All mortar joints in brick, tile, or masonry basement and crawlspace walls and control joints between concrete panels **should** be intact, without cracks or missing or deteriorated sections.

2.1.3 PIERS AND COLUMNS

Standard: Piers and columns **shall** be structurally sound, without missing or broken supports, and without supports that are decayed, deteriorated or otherwise unable to safely support the load. Supports **should** be of sufficient number, size, construction and location to safely support the load. Repairs **shall** comply with RRS Section 2.1.1 and the applicable requirements of the RCO.

2.1.4 WOOD FOUNDATIONS

Standard: Wood foundations **shall** be structurally sound, without missing or broken supports, and without supports that are decayed, deteriorated or otherwise

unable to safely support the load. Repairs **shall** comply with RRS Section 2.1.1.

2.1.5 FOUNDATION WINDOWS AND ACCESS DOORS

2.1.5.1

Standard: **Foundation windows, doors, and accesses:** Openings through foundation walls (e.g. windows, doors and accesses) that are necessary for egress, light, and/or ventilation **shall** be functional, weather tight, structurally sound and provide for adequate security. New access openings **shall**, at a minimum, be sized per the applicable section of the RCO. Exposed bare wood or other exposed materials that are subject to decay **shall** be primed and painted or covered with a durable weather-resistant material. For basements with bedrooms or other habitable spaces, note the egress requirements at RRS 6.6.1.

Exception: Where physical space does not exist to size a new access opening to the requirements of the RCO, then it will be permissible to install an access opening smaller than what the RCO requires. However, the access opening must be as large as physically possible.

2.1.5.2

Standard: **Foundation openings:** Foundation openings such as windows and old coal chutes that are not necessary for light, ventilation, or egress as described in the ORC, Section 303, Section R408 & RRS 6.6.1) **shall** be free from safety hazards (peeling lead-based paint, broken glass, etc.); deterioration (rotted wood, rusted through, etc); and unwanted air and moisture infiltration; and they **shall** provide for adequate security. They **shall** be replaced, repaired, or sealed up (using appropriate materials, such as concrete blocks); whichever is most cost effective.

Commentary: Unsealed openings in foundation walls are pathways for air infiltration and vermin. Foundation windows and access doors that do not have locks are a security problem. Repairs to remedy these defects include replacing missing or broken glazing, sealing gaps between the framing and the foundation, weather stripping of windows and doors that open and installing latches/locks on windows and doors that open. Fasteners used for the installation of windows, doors, and access panels must be appropriate for the location and adequate to secure these building components. Care must be given to ensure that the materials used are appropriate for their exposure to moisture and that the combination of materials used together will not result in corrosion.

The replacement of non-egress foundation windows not necessary for light or ventilation are not typically a high priority item, as they can be repaired or the opening permanently sealed. Therefore, more important health and safety items must be addressed prior to spending additional funds to replace non-necessary foundation windows when less expensive options exist.

2.1.6 FOUNDATION PERIMETER DRAINAGE AND MOISTURE CONTROL

Standard: Foundation perimeter grading **shall** be sloped away from the foundation and without depressions or other conditions that allow water to pool or drain towards the foundation.
Earth **shall** be a minimum of 6 inches away from wood framing members. Site drainage adjacent to the foundation **should** conform to the RCO. Where severe moisture problems exist in basements, cellars or crawlspaces, additional measures **shall** be used to mitigate the problems.

Exception #1: Where it is physically impossible to slope the grade away from the foundation, other appropriate alternative methods **shall** be used to keep water from pooling or draining towards the foundation.

Exception #2: Where it is physically impossible to keep the earth 6 inches away from the wood framing members, other appropriate alternative methods **shall** be used to protect the wood and other decay prone building materials from the earth's moisture and from insect infestation.

Commentary: Potential alternative methods for keeping water from pooling or draining towards the foundation when sloping the grade is physically impossible may include the pouring of concrete slabs around the perimeter of the house wherever the pooling or drainage problem exists (the concrete must slope away from the house and be thoroughly caulked along the perimeter of the house); the installation of drain lines to carry the water away from the foundation; or the digging out of a trough along the wall around this portion of the house, along with the building of a low retaining wall several feet from the house to hold the exposed earth, so that a swale is created which will allow the earth to slope away from the house (often drain lines are also necessary near the retaining wall to remove the water).

Potential Alternative methods for protecting wood from the earth's moisture and from insect infestation include the provision of a physical barrier between the wood and the earth (the barrier must not trap moisture in the wood, and must be made of a tough non-decaying, non-corrosive material); or the creation of a swale as described in the paragraph above.

Appropriate additional moisture control measures may include; damp proofing of walls, installation of a foundation drainage system, installation of sump pumps, installation of adequate gutters and downspouts, a diversion of the water from the gutter and downspout system away from the foundation, and the diversion of run-off away from the foundation and its access points.

OCD does not expect that moisture problems will be eliminated so that wet basements or enclosed crawlspaces are made completely dry. However, OCD expects that grantees will investigate the cause of the seepage and include measures that effectively reduce the amount of moisture so that basements or crawlspace areas are dryer than before work was done.

2.1.7 ENCLOSED CRAWLSPACE VENTILATION, ACCESS, MOISTURE CONTROL

2.1.7.1

Standard: **Moisture and air Barrier/vapor retarder:** A vapor retarder such as 6 mil polyethylene **shall** be installed in each crawlspace and basement without a concrete floor. This vapor retarder **should** be without voids or gaps, and **should** overlap a minimum of 6 inches at the foundation wall and seams. To also act as a moisture and air barrier in the case of an enclosed conditioned crawlspace or basement, all edges, gaps and seams **shall** be sealed with an appropriate tape or sealant. Prior to installing a moisture barrier/vapor retarder, all rubbish **shall** be removed to help ensure complete coverage and to reduce the amount of moisture trapping items.

Exceptions: Crawlspaces that do not have sufficient height (i.e. 24 inches or less of continuous clearance) to allow for the installation of a vapor retarder or access, are not required to have a vapor retarder or an access. However, efforts to increase the clearance to achieve the standard **should** be made. Also, in

crawlspaces where it is impossible to avoid seasonal or episodic standing water a concerted effort **shall** be made to mitigate this – (see RRS 2.1.6), in this case, the moisture and air barrier/vapor retarder **shall not** be sealed as described above. Also, consideration **should** be given to the connection between the living area and a crawlspace when these measures are not able to be taken, and extra efforts **should** be made to mitigate negative air quality impacts on the occupants.

Commentary: A properly installed moisture and air barrier/vapor retarder can be an important strategy to help reduce the amount of soil produced moisture which may accumulate in the crawlspace.

2.1.7.2

Standard: **Unconditioned crawlspaces:** Enclosed unconditioned (i.e. unheated or unintentionally heated) crawlspaces **shall** be ventilated, accessible, and free of excessive rubbish accumulation. New ventilation openings **should** conform to the applicable RCO Section. New crawlspace vents **shall** be able to be opened and closed manually.

Exception: For crawlspaces that do not have sufficient height (i.e. 24 inches or less of continuous clearance) to allow for these measures, these measures **shall not** be required.

2.1.7.3

Standard: **Enclosed conditioned crawlspaces:** Enclosed conditioned (i.e. intentionally heated) crawlspaces **shall** be accessible and free of excessive rubbish accumulation. Enclosed conditioned crawlspaces and crawlspaces with perimeter wall insulation **shall not** be ventilated. Where feasible, enclosed conditioned crawlspaces **should** be in accordance with the applicable RCO Section. All newly built crawlspaces **should** be of the enclosed conditioned type. All newly built crawlspaces **shall** be constructed in accordance with the RCO.

2.1.7.4

Standard: **Separation between conditioned and unconditioned spaces:** Separation **shall** be made between conditioned and unconditioned or unintentionally conditioned spaces in a dwelling. Access holes between the spaces **shall** be provided with a door, and the separation wall/ceiling/floor **should** be properly sealed to prevent the movement of air and moisture between the conditioned and the unconditioned spaces.

2.1.8 <u>BASEMENT, CELLAR, & SLAB-ON-GRADE FLOORS</u>

2.1.8.1

Standard: **Concrete floor required:** All basement areas that will be regularly used by the occupant **should** have a concrete floor over the section of the basement that is regularly used.

Commentary: When basement areas do not have a proper floor, this potentially creates a number of problems. The earth can be a tripping hazard, and the moisture/vapor barrier can get torn up and become ineffective. This is often exacerbated by the accumulation of stored items in these areas. Dust can be generated, furnaces, washing machines and other appliances are exposed to corrosive moisture, and a number of air quality issues can result. The lifestyle of the occupant and the

use of each area need to be considered. Basements may have a number of uses including the laundering of clothes, living, sleeping, play areas, storage, etc. The intensity of use of each area, the physical ability of each occupant using the area, and the air quality of the area must all be considered, along with cost factors, in making a determination of whether a floor is required.

2.1.8.2

Standard: **Concrete floor conditions:** All concrete floors in areas used by the occupant **should** be without serious deterioration or conditions that present a falling or tripping hazard to the occupant. All new slab-on-grade foundations **shall** meet the requirements of RRS 2.1.1.

2.1.8.3

Standard: **Vapor Barrier required:** Dirt floors in cellars or basements which are not regularly used by the occupant, **shall** be covered with an approved moisture and air barrier/vapor retarder as described in RRS 2.1.7.1.

2.1.8.4

Standard: **New or replacement floor requirements:** New or replacement concrete floors **shall** conform to the RCO, and **should** have control joints at 15-foot intervals.

Commentary: Where a concrete floor already exists, problems such as large cracks or missing and uneven sections must be repaired so that the floor is not a hazard to the occupant.

Where a bare dirt floor exists and the basement is regularly used (walked across several times each week) by the occupant for laundry, storage, etc., OCD strongly recommends that a concrete floor be installed. Covering exposed dirt floors with a vapor retarder will decrease the level of humidity and the amount of moist air entering the house. If the basement has more than one room, then only the rooms that are regularly used are required to have a concrete floor.

2.2 FLOOR CONSTRUCTION, FRAMING AND SUB-FLOORS

2.2.1 NEWLY FRAMED FLOORS

Standard: All new floor system construction **shall** conform to the RCO.

2.2.2 FLOOR INTEGRITY

Standard: The floor structure **shall** be sound and able to support the loads imposed on it. Badly sagging floors, more than a few inches out of level, **should** be provided with additional support, and an effort **should** be made to make them more level.

Floor joists, band boards, headers, girders, support columns, bridging, sheathing, underlayment, and etc. **shall** be structurally sound and without decay or deterioration that weakens the floor's ability to safely support the load. Defects in the floor framing such as; rotted, broken, inadequate, or missing joists, headers, bridging, girders and girder support columns, etc. **shall** be corrected. Repairs **should** conform to the RCO.

2.2.3 CUTTING NOTCHING, AND BORING

Standard: Structural floor members **shall** not be cut, bored or notched in a way that compromises the integrity of the structural members. Where this has been the case, additional support or modifications to return the structural integrity of the floor **shall** be provided. All cutting, boring and/or notching that is done during work on the project **shall** be within the limitations specified in the RCO.

2.2.4 FLOOR SHEATHING

Standard: Defects in the sub-floor such as deteriorated, loose or weak sheeting or underlayment **shall** be corrected. New sheathing installations **shall** conform to the applicable section of the RCO, and the manufacturer's installation instructions.

Commentary: Deteriorated and weakened floor framing and sub-floors can be the result of poor initial construction, careless renovating, damage caused by water and/or wood boring insects or problems with the foundation. These conditions can compromise the dwelling's structural integrity and constitute a potential safety hazard. Consequently, OCD expects such conditions to be thoroughly inspected and appropriate corrective measures taken.

OCD does not expect floors to be made completely level. However, severely sloped or uneven floors need to be repaired so that hazardous conditions are eliminated. Also, floors need to provide a reasonably flat, even, horizontal surface to the interior of the dwelling.

2.2.5 FLOOR COVERING

Standard: Floor covering materials **shall** be appropriate to the use of the space and without defects that present serious tripping or other safety hazards to the occupants. New floor covering materials **shall** be installed according to the manufacturer's installation instructions.

Exception: Floor coverings that are merely dirty or slightly worn, but still effective and safe, **shall not** be replaced.

2.2.6 FLOORING IN KITCHENS AND BATHS

Standard: **Flooring in kitchens and baths:** Replacement floor covering materials for kitchens, bathrooms, above grade laundry/utility rooms and other rooms with plumbing fixtures **should** be water resistant.

Commentary: New floor coverings must only be installed because the existing covering is a hazard, obviously ineffective, because the sub-flooring has been replaced, or because other work within the house requires it (for example, changing the size of the room). OCD recommends that replacement floor covering materials are selected for durability, safety and ease of maintenance.

2.3 WALL CONSTRUCTION

2.3.1 NEWLY CONSTRUCTED WALLS

Standard: All new wall systems **shall** conform to the RCO.

2.3.2 FRAME WALL CONSTRUCTION

Standard: Wall framing, including studs, top plates, headers, sole plates, etc., **shall** be structurally sound and without missing, broken, decayed or deteriorated framing members that weaken the wall's ability to safely support the load. Repairs to wood framed walls **shall** conform to the RCO.

2.3.3 CUTTING, NOTCHING, AND BORING

Standard: Structural wall members **shall** not be cut, bored or notched in a way that compromises the integrity of the structural members. Where this has been the case, additional support or modifications to return the structural integrity of the wall **shall** be provided. All cutting, boring and/or notching that is done during work on the project **shall** be within the limitations specified in the RCO.

2.3.4 MASONRY WALL CONSTRUCTION

Standard: Masonry walls **shall** be structurally sound and without missing or broken sections, severely deteriorated mortar joints or other defects which weaken the wall's ability to safely support the load. To the extent possible, repairs to masonry walls **shall** conform to the RCO.

Commentary: Deteriorated and weakened framing and masonry walls can be the result of poor initial construction, careless renovating, damage caused by water and wood boring insects, or problems with the foundation. These conditions can compromise the dwelling's structural integrity and constitute a potential safety hazard. Consequently, OCD expects such conditions to be thoroughly inspected and appropriate corrective measures taken.

2.3.5 EXTERIOR WALL COVERINGS

Standard: Exterior wall coverings, including siding, window and door trim, eaves, soffits, brick or stone veneer, etc., **shall** be structurally sound, secure and weather tight without broken, missing or deteriorated surfaces. Exposed bare wood or other exposed wall covering and trim materials (including the window and door trim, eaves, soffits, rake board, etc.) which are subject to decay, **shall** be primed and painted or covered with a durable weather-resistant material. New untreated wood **should** be primed on all six sides prior to installation.

Where paint or stain is used as the protective coating, it **shall** be applied as directed by the manufacturer. Mortar joints that are in a deteriorated condition **should** be repaired (See the National Park Services Preservation Brief on "Repointing Mortar Joints" for useful information on developing specifications for this purpose.) Masonry that is in very poor condition, with mortar joints that are in a severely deteriorated condition and/or missing bricks, stones, etc. **shall** be repaired or replaced. Replacement exterior wall covering materials **shall** be installed to conform to the RCO, and the manufacturer's installation instructions. Wall covering and trim materials that are in adequate condition (i. e., the surface and finish are consistent and are not deteriorated); are not required to be replaced for another reason outlined somewhere in the RRS; and do not present a lead-based paint hazard; **shall not** be covered or replaced with a new material. When minor deterioration exists, grantees **should** repair only the deteriorated areas rather than replacing the entire exterior wall covering. All exterior surfaces

shall be free of lead-based paint hazards as outlined in the RRS, Chapter 7.

Commentary: OCD does not expect the exterior surface of the walls to be completely without blemish. However, all defects or deterioration that would allow the elements to enter the structure, and all rotted materials must be properly addressed. The exterior wall covering is important because it is the barrier that protects the interior support components and interior surfaces from weather damage. Exterior wall coverings also impact the visual appearance of the home and, on homes where exterior wall coverings can be covered with a new material, there may be a tendency to do so. OCD expects grantees to carefully consider the reasons for installing new wall coverings.

2.3.6 INTERIOR WALL AND CEILING COVERINGS AND SURFACES

Standard: Interior wall and ceiling coverings in habitable spaces **shall** form a continuous durable surface without large holes or wide cracks penetrating through the covering, without severe deterioration and without missing sections of non-cosmetic trim, window or door casing (trim necessary for air sealing or structural integrity). Large cracks and holes (i.e. penetrations through the wall covering material exposing wall construction materials or cavities) **shall** be repaired. Also, sagging or loose wall and ceiling covering materials **shall** be repaired or replaced. Cosmetic trim **should** be replaced, and small penetrations through the wall and ceiling surfaces **should** be filled. Repair materials **should** be compatible in composition and finished appearance to the original surrounding materials. New interior wall and ceiling covering materials and trim **shall** be installed to conform with the RCO and the manufacturer's installation instructions.

Commentary: OCD does not expect interior wall and ceiling surfaces to be free from all cracks, holes or other imperfections. Plaster or wallboard surfaces in older homes often have defects and it is not reasonable for a rehabilitation program to make these surfaces appear like new. Surface cracks, uneven surfaces and other minor defects on otherwise solid walls and ceilings do not need to be repaired.

2.3.7 SEPARATION BETWEEN ATTACHED GARAGE AND LIVING SPACE

Standard: The garage **should** be separated from the residence and its attic area by not less than ½" gypsum wallboard, taped and sealed, and applied to the garage side. Garages beneath habitable rooms **should** be separated from all living space above by not less than 5/8 of an inch, Type X, taped and sealed, gypsum wallboard. This includes covering of all structural elements. All new work to garage areas **shall** be in conformance with the RCO.

Commentary: Carbon monoxide, fumes from potentially spilled fuel, and fire are dangers associated with garages, and measures need to be taken to ensure that the occupants are protected from these hazards.

2.3.8 SEALING OF SURFACES

Standard: Raw plaster, wallboard, joint compound, and bare wood **shall** be primed or sealed to protect the surface and to make it cleanable. Wall and ceiling surfaces that have been replaced in high moisture areas, such as bathrooms containing bathing/shower spaces, **shall** be smooth and non-absorbent. All interior

surfaces **shall** be free of lead-based paint hazards as outlined in the RRS, Chapter 7.

2.4 WINDOWS AND DOORS

2.4.1 WINDOWS OPERABLE

Standard: Each habitable room that contains a window **shall** have at least one window that is openable and in operating condition, capable of being held in the open position by the window hardware.

Openable windows **shall** have functioning security hardware and insect screens. Bedroom or sleeping room windows which are intended to serve as emergency escape and rescue openings **shall** meet the requirements of RRS Section 6.6.1.

2.4.2 STRUCTURAL SOUNDNESS

Standard: All windows **shall** be structurally sound, secure and weather tight without deteriorated components (e.g. sashes, jambs, sills, trim, etc.) and without missing, broken or severely cracked glazing. Exposed bare wood and other exposed materials which are subject to decay shall be primed and painted or covered with a durable weather-resistant material.

All windows **shall** be free of lead based paint hazards as outlined in the RRS Chapter 7. Windows that are sound and functional, do not present a lead-based paint hazard, and for which an energy audit (as recommended in RRS 2.6.2, and described in Appendix 2-A) does not show replacement to be a cost effective means of reducing energy costs **shall not** be replaced.

2.4.3 REPLACEMENT WINDOWS

Standard: Replacement window units **shall** meet the requirements of the RCO, and shall be installed according to the manufacturer's installation instructions. Storm windows **shall not** be installed over replacement window units.

Commentary: The condition of the windows can have a significant effect on the appearance of the home and owners might routinely expect windows to be replaced. Consequently, the desire to improve the home's appearance and satisfy the owner's expectations could create a tendency to replace older windows. OCD expects grantees to carefully consider the reasons for replacing windows. Under most circumstances, energy efficiency alone is not a cost-effective criterion because the cost of the new window greatly exceeds the value of the savings.

2.4.4 EXTERIOR DOORS

Standard: Passageways between the interior conditioned spaces of the dwelling and the outside **shall** have an exterior-rated door. Doors to attached garages **shall** comply with the RCO. All exterior doors **shall** be structurally sound, easily operable, weather tight and fitted with functioning hardware that tightly latches and securely locks the door. Locks **shall not** require a key for exiting from the interior as per the RCO. Exposed bare wood and other exposed materials which are subject to decay **shall** be primed and painted or covered with a weather-

resistant material. Replacement doors **shall** be installed according to the manufacturer's installation instructions. Doors that are sound and functional, and that do not present a lead-based paint hazard **shall not** be replaced.

Commentary: As with windows, exterior doors can have a significant effect on the appearance of the home and on the homeowner's expectation of the rehabilitation program. The desire to improve the home's appearance and meet the owner's expectations could create a tendency to replace exterior doors. OCD expects grantees to carefully consider the reasons for replacing doors. In general, doors that are sound and functional need not be replaced. If minor repairs or weather stripping are needed, repairing or replacing only the defective parts is preferred over replacing the entire door, unless replacing the entire door is justified as more cost-effective.

2.4.5 INTERIOR DOORS

Standard: Bathrooms, bedrooms, utility rooms/enclosures which contain fuel-burning non-direct vent space heating or water heating equipment, and passageways leading to unconditioned spaces within the dwelling (e.g. attics, basements, enclosed porches, etc.) **shall** have a door. All interior doors **shall** be structurally sound, easily operable and fitted with functioning hardware that tightly latches the door. Doors to unconditioned spaces **should** be weather stripped.

Commentary: A door to a bedroom and a bathroom is necessary for privacy. A door to a utility room/enclosure containing non-direct vent combustion equipment is necessary to separate the equipment from the living space while providing an access for maintenance and repairs. Otherwise, the area around the equipment may become used for storage, thus creating a potential fire hazard or potentially restricting the supply of combustion air. However, confined space issues need to be considered when adding a door to a room containing non-direct vent combustion equipment. The door may need to be louvered, or another means may need to be found to introduce combustion air into the space. Weather stripping doors which lead to unconditioned spaces will help reduce the air movement between heated and unheated areas.

2.5 ROOF AND CEILING CONSTRUCTION, ATTICS AND ROOF DRAINAGE

2.5.1 ROOF AND CEILING CONSTRUCTION

2.5.1.1

Standard: **Newly constructed roof/ceiling assemblies:** All new roof/ceiling assemblies **shall** conform to the RCO.

2.5.1.2

Standard: **Roof and ceiling framing:** The roof/ceiling structural system, including trusses, rafters, ridge beams, collar ties, knee walls, ceiling joists, top plates, sheathing, etc., **shall** safely support the loads imposed, including the appropriate snow load. Framing members and sheathing **shall** be structurally sound, properly fastened together and secured to the walls, and form a sound base for attaching the roof covering material. The roof/ceiling structural system **shall** be configured so that drainage slopes towards a perimeter edge of the dwelling into a controlled water collection and discharge system. Problems such as deteriorated, missing or loose framing or sheathing **shall** be corrected. Roof structures incapable of

safely supporting the load or providing adequately sloped drainage **shall** be repaired or replaced. Repairs and replacements **shall** conform to the RCO.

2.5.1.3

Standard: **Sagging Roofs:** Severely sagging roofs **should** be repaired or replaced. See the notes in the commentary below.

Commentary: The structural integrity of the roof/ceiling framing system is critical to the long-term durability and habitability of the structure. Therefore, it must be inspected to determine if repairs are necessary. Sometimes the roof/ceiling framing system of older homes have sagged and settled over time due to age, the use of undersized lumber and/or questionable initial workmanship. For example, a ridge beam might have sagged because of a lack of collar ties or the rafters have sagged because the lumber was too small. In such cases, OCD does not expect all of the defects to be corrected so that the roof/ceiling framing system is perfectly straight and level. However, in such cases OCD expects that grantees will make repairs necessary to stabilize the structure in order to prevent future deterioration and to provide for a relatively even surface for the roof covering.

2.5.2 ATTIC SEALING AND VENTILATION

2.5.2.1

Standard: **Attic ventilation:** Ventilation in unconditioned attic air spaces (including enclosed attics, open joist attics and enclosed rafter cavities), where feasible and necessary, **shall** conform to the RCO. To ensure the free flow of air from eave or cornice vents, baffles or other blocking **shall** be installed, as necessary, to prevent insulation from covering the vent openings.

2.5.2.2

Standard: **Attic air sealing:** The building envelope separating the conditioned living space from the unconditioned attic space **should** be properly air sealed as outlined in RRS 2.8.1. All attics without any existing insulation **shall** be air sealed prior to installing insulation. All attic access doors **should** be weather stripped air tight. Where there is evidence of too much heat and moisture in the attic, such as mold, water staining, premature deterioration of shingles, etc. air sealing **shall** be done.

Commentary: Providing air circulation is a strategy to help protect the roof/ceiling framing members (and the roof covering materials) from heat and moisture damage. Proper air sealing to prevent warm moist air from entering the attic space in the first place is also a primary strategy (see RRS Section 2.8.1).

2.5.3 ATTIC ACCESS

Standard: Attic spaces with an area of at least 30 square feet and a clear height of over 30 inches that do not have a means for entrance **should** be provided with an access. New access openings **should** be sized to conform to the applicable section of the RCO, (i.e. at least 22” x 30”).

Commentary: Entrance to attic spaces is necessary for completing various rehabilitation measures and for inspecting those measures. Accesses are ideally constructed

so that entry is from the interior of the dwelling, however, access through a removable gable end vent or other openable means is an acceptable alternative. Where there is reason to believe that there are problems within an attic space that need corrected (i.e. staining or curling shingles indicating excessive heat or moisture buildup) ensuring access becomes even more important.

2.5.4 ROOF COVERINGS

2.5.4.1

Standard: **General requirements:** Roof coverings **shall** provide a waterproof barrier protecting the roof/ceiling structural system and the interior building surfaces from moisture damage. Roof coverings; including valley flashing and flashing against walls, chimneys, stacks and pipes **shall** be watertight, durable and free from excessive wear and obvious defects in materials and workmanship. Problems such as evidence of severe deterioration (e.g. curled/cracked asphalt shingles, severely corroded metal or moss growth), missing, loose or ineffective or inappropriate materials **shall** be corrected.

2.5.4.2

Standard: **Flashing, drip edge, low slopes:** Roof covering repairs and replacements **shall** conform to the manufacturer's installation instructions and to the RCO. In addition, when the flashing and roof covering materials are replaced, the following materials and practices **shall** be used:

a. Metal flashing material **shall** be inspected for corrosion and other defects. Their replacement, when necessary, including the appropriate methods and materials, **shall** be specified in the scope of work. The materials and methods **shall** conform to the material specifications and installation requirements of the RCO.

b. Metal drip edge **shall** be installed along all eaves and rakes.

c. Where the roof slope is between 2/12 and 4/12 and where the average daily January temperature is 25° F or less, multiple layer underlayment or other specialty materials **shall** be used to protect against ice and water damage as described in the RCO, or materials specially designed for low slope roofs **shall** be used.

d. The type of roofing materials selected for the given slope and application **shall** conform to the RC.

Commentary: The ability of the roof covering materials to shed water is critical to the long-term durability and habitability of the dwelling. Therefore, the roofing materials must be thoroughly inspected to determine if repair or replacement is needed. In lieu of observable criteria for determining the need to replace a roof, OCD recommends that grantees establish other criteria such as the estimated useful life remaining for the materials and/or a comparison of the cost to repair the roof versus the cost to replace it.

2.5.5 GUTTERS AND DOWNSPOUTS

Standard: Gutters and downspouts **shall** be properly sized, positioned, connected and secured to the structure so that roof drainage is collected and discharged without obstruction. Defects in the gutter system such as; missing, damaged, undersized, leaking, blocked, improperly sloped or loose gutters and downspouts **shall** be corrected. A gutter **shall** be installed at the bottom edge of each roof slope and there **should** be at least one downspout for each 600 square feet of roof drainage area, or an alternative, such as an oversize gutter and downspout, **shall** be provided. If permitted by local code, downspouts **should** be connected to an approved functional in-ground drainage system. If connection to an approved functional in-ground drainage system is not possible, downspouts **shall** be brought to grade level and, by extension or splash block, direct the water away from the foundation for a distance as close to 3 to 5 feet as possible. To minimize the accumulation of leaves in the gutter trough, a screen or other shielding product may be installed, as needed. Replacement of gutter and downspout systems **shall** conform to the manufacturer's installation instructions.

Commentary: The controlled collection and discharge of rain water run-off is an important strategy to help control foundation moisture problems. Therefore, the gutter system must be inspected to determine if repair or replacement is needed.

2.6 BUILDING SHELL ENERGY EFFICIENCY

2.6.1 INSULATION OF THERMAL BOUNDARY IN NEW HOMES

Standard: The thermal boundary of new construction dwellings and room additions **shall** be insulated in accordance with this section of the RRS and applicable sections of the IECC. Insulation **shall** be installed in accordance with the manufacturer's installation instructions and this section of the RRS. In addition, all new construction dwellings **should** comply with all Energy Star requirements. For existing houses,

2.6.2 PRE-EXISTING INSULATION

Standard: Pre-existing insulation **should** provide uniform and complete coverage. Gaps in the coverage of existing insulation **shall** be filled so that the area achieves a uniform thermal value.

Commentary: While adding insulation to uninsulated areas is almost always cost-effective, there are circumstances when the cost-effectiveness of adding insulation isn't clear. Examples of such circumstances include: when some insulation already exists, when the cost to install the insulation is extremely high, when the area to be insulated is extremely small or when the cost of heating the space is extremely low. The factors which affect the balance between cost and savings should be examined. Methodology to calculate cost-effectiveness based on "simple payback" is provided in RRS Appendix 2-B. For determining a reasonable payback period, OCD recommends a payback period of three to five years. Calculating a simple payback is also useful for prioritizing insulation measures when overall job cost is an issue. For example, a measure which produces a savings equal to its cost within a three to five year period should be prioritized over measures which "payback" over a longer period.

For the majority of older uninsulated frame homes the prioritized list of insulation measures would typically be attics first, sidewalls second and floors/perimeters third. It can be valuable to conduct an energy audit prior to making any energy related modifications, such as the modifications outlined in the bullets below. Based upon this analysis and the project budget, those measures that are most cost effective in reducing energy costs and in improving occupant comfort can be selected for integration into the rehabilitation scope of work and could include the following:

- Insulation of attics/ceilings
- Insulation of knee walls
- Insulation of sidewalls
- Insulation around openings (doors/windows, etc)
- Insulation of the building perimeter (band joists, etc.)
- Insulation of the floor
- Insulation of the foundation
- Air sealing of holes gaps and/or cracks in and around the building envelope
- Sealing and/or insulating of ductwork
- Replacement of doors and/or windows
- Replacement of outdated and/or inefficient air/water heating equipment.
- Replacement of outdated and/or inefficient appliances.

2.6.3 UNCONTROLLED AIR MOVEMENT

Standard: Uncontrolled pathways (i.e. holes, cracks, chase ways, etc.) and controlled pathways (i.e. exhaust fans) which exchange conditioned and unconditioned air **should** be addressed. Also see specific air sealing requirements for attics, RRS 2.5.2.2. Where air sealing is done, the following guidelines apply.

Holes, gaps, chase ways and other paths connecting the conditioned spaces of the dwelling and its unconditioned spaces or to the outside need to be sealed in order to reduce the uncontrolled movement of air and moisture into and out of the conditioned spaces.

Priority **should** be given to sealing air leakage sites that present the greatest potential for heat loss and moisture migration due to natural and mechanically driven air pressure differentials. Priority air leakage sealing sites are often those that are located low and high on the building's elevation or that connect areas within the building that are low and high on the building's elevation, and thus significantly contribute to "stack effect" air movement. Materials used for air sealing must be durable and air impermeable, such as; quality caulks, foam sealants, mastics and plastic or spun polymer sheeting. In lieu of blower door directed air-sealing, the following routine air leakage measures **should** be completed:

a. Sealing holes, gaps and cracks through the exterior building shell that connect to the dwelling's interior such as; gaps in and around utility lines, coal chutes, foundation materials, band boards, sill plates, windows and doors, etc.

b. Sealing holes and open pathways inside of the building that connect conditioned areas to unconditioned areas or to the outside such as; plumbing, HVAC, electrical and chimney chase ways, undampered fireplaces, open chimney flues or clean-outs, open partition walls, open top and sill plates, joist cavities under knee walls, etc. Air leakage sites that are located in areas that contain pre-existing insulation **should** be

sealed. Air leakage sites that are located in areas that are to be insulated **should** be sealed prior to installing the insulation.

c. Sealing holes, gaps and cracks in and around interior wall and ceiling surfaces particularly between conditioned and unconditioned areas, in high moisture areas and in ceilings above drop ceiling panels such as; gaps around attic accesses and ceiling exhaust fans, and covering holes in the plaster or drywall above drop ceilings. If electrical, HVAC or plumbing work creates new holes or chase ways, air leakage sealing **should** be done after the mechanical systems work is completed.

Rehabilitation measures **shall not** create conditions of accelerated deterioration from moisture condensation to the home or pose a negative effect on the health of the occupant's post-rehabilitation air movement ventilation rates **should** not be less than the ASHRAE standard of 15 cfm per person or .035 air changes per hour. If these building tightness limits are exceeded, or in extreme environments that contain several contributing moisture factors, installing controlled ventilation devices **should** be considered. For specific Indoor Air Quality requirements, refer to RRS Section 6.7.2.

Commentary: Controlling air movement and reducing convective heat loss is an important factor in increasing the occupant's comfort level, reducing the dwelling's energy consumption and improving the dwelling's durability. Therefore, the dwelling must be thoroughly inspected to locate the air leakage sites. OCD recommends that the inspection include blower door tests and pressure measurement tests to locate the leakage sites, quantify the problem and determine the extent of the air-sealing needed to reduce the leakage to an acceptable level relative to the homes volume, number of occupants, and the lifestyle of the occupants.

Sealing air leakage sites is an important factor in controlling moisture and contaminate levels in conditioned air spaces. The rehabilitation measures must be designed to minimize the amount of moisture and contaminates, and to allow for adequate, but not excessive ventilation.

Sources of moisture and contaminates in the air (i.e. combustion appliances, attics, crawl spaces, slab foundations, aquariums, houseplants, air conditioners, and inadequate use of exhaust fans, etc.) should be considered when air sealing. Inadequate ventilation can increase indoor pollutant levels by not bringing in enough fresh air to dilute emissions from indoor sources and also create conditions for accelerated growth of mold and mildew. High humidity in a building's structural cavities can also lead to peeling paint, wood decay and eventually structural failure. Yet many older homes have ventilation levels far exceeding that required for fresh air ventilation. This causes discomfort to the occupants, can introduce contaminates from the outside, and decreases energy efficiency and affordability.

2.6.4 CONTROLLED AIR MOVEMENT (MECHANICAL VENTILATION DEVICES)

Standard: Mechanical ventilation to the outside of the structure **shall** be installed for all bathrooms and other rooms or areas that contain a bathtub and/or shower. If no operable window exists in the kitchen, or if it is required by code, then mechanical ventilation **shall** be installed. Otherwise mechanical ventilation **should** be installed in the kitchen. All clothes drying appliances **shall** be properly vented. Existing kitchen, bath and dryer exhaust fans that are undampered **shall** be fitted with a damper (or replaced with a dampered exhaust fan) so that the exhaust opening is closed when the fan is not operating.

Kitchen range exhaust fans and clothes dryer vents **shall** be connected to smooth-walled non-combustible duct running the most direct, shortest feasible route through the structure directly to the outside air. Ducts made of combustible material, ribbed ducts, sagging ducts or ducts that terminate in the vicinity of a crawlspace or roof vent or that exit within three feet of the building's eaves **shall not** be allowed. Exhaust duct sections **shall** be securely fastened together (dryer vents **shall** be fastened without screws) and securely supported to prevent disconnection, sealed and, where in unconditioned spaces, insulated, to prevent air leakage and condensation.

Bathroom exhaust fans shall be connected to an approved smooth-walled duct running the shortest feasible route through the structure directly to the outside. Sagging ducts, ducts that terminate in an attic or in the vicinity of a roof vent or that exit within three feet of the building's eaves **shall not** be allowed. Exhaust duct sections **shall** be securely fastened together and securely supported to prevent disconnection, sealed and, where in unconditioned spaces, insulated to prevent air leakage and condensation. Mechanical ventilation devices **shall** be installed in accordance with the manufacturer's installation instructions.

Existing dryer exhaust vents and range hoods **shall** conform to the RCO. Existing bathroom mechanical ventilation systems **shall** also conform to the RCO.

Newly installed bathroom exhaust fans **shall** be able to move enough air for 8 air changes per hour. A formula to use in sizing an intermittent bathroom exhaust fan is: cfm = volume of the room in cubic feet divided by 7.5. This will give you the minimum size for the exhaust fan in cubic feet per minute of air moved (cfm). All replacement or new exhaust fans **shall** be a maximum of **2.5** sones. The fan **should** be installed in a manner that will encourage the occupants to use it and to leave it on long enough to be effective, for 20 minutes to an hour after showering.

Some suggested methodologies are listed below:

- Put the fan on a humidistat so that it automatically goes on when moisture levels in the room are high (Since fans are designed to eliminate moisture, this is a very straightforward approach).
- Put the fan on the same switch as the light or on a motion sensor and add a delayed fan shut-off so that the fan stays on after the light is switched off or the person leaves the room.
- This final option only works if the client uses it, so is less desirable, but can possibly work with some client education. Put the fan on an electronic timer (not a loud mechanical timer), and teach the clients to always turn it on.

Commentary: Bathrooms, in particular, are notorious for having peeling or bubbling paint, deteriorated wood trim and plaster/drywall, and mold/mildew problems. These problems are associated with excessively high moisture content in the air and can lead to structural issues and poor indoor air quality. Providing a means for controlled ventilation can be an important strategy for reducing interior humidity and improving indoor air quality. For specific room ventilation requirements, see RRS Section 6.2.2.

2.6.5 CEILING (ATTIC) INSULATION

Standard: All existing accessible attic floors (open joist cavities) **shall** be insulated to R-38 (see air sealing requirements at 2.5.2). Ceilings located between conditioned and unconditioned spaces in existing dwellings **should** be insulated as close as possible to the following standards.

LOCATION	INSULATION VALUE	TYPES OF INSULATION
Open Joist Cavities (floor collar beam & drop soffits areas)	R-38	All Types
Enclosed Joist Cavities, or Enclosed Rafter Cavities, or Enclosed Knee wall Cavities/floors	3.25 to 3.75 lbs/cu.ft. 1.6 lbs/cu.ft.	Blown Cellulose Or Blown Mineral/Glass
Open Knee wall Cavities, or Drop Soffits Walls	R-13 to R-19	Batt
Access Hatch Covers	R-38	Batt or Rigid Board
Access Doors	R-13 to R-19	Batt or Rigid Board
Knee wall Flats	R-38	All Types
Slopes	3.25 to 3.75 lbs/cu.ft. 1.6 lbs./cu.ft.	Blown Cellulose or Blown Mineral/Glass

Ceilings located between conditioned and unconditioned spaces in new construction and room additions **shall** be insulated in accordance with the IECC. Ceiling insulation **shall** be installed according to the manufacturer's installation instructions and the IECC. The insulation **shall** be installed to provide complete and uniform coverage. Voids or gaps in the insulation (particularly batt insulation) or areas with shallow amounts of insulation **shall not** be allowed.

In addition, ceiling insulation **shall** be installed according to the following practices:

a. Items stored in the attic **shall** be removed during the insulation process. Covering items with insulation **shall not** be allowed.

b. Electrical junction boxes in attics with no existing insulation **shall** be flagged above the level of the new insulation so that they can be easily located.

c. Heat producing devices **shall** be blocked off to prevent contact with the insulation. For example, blocking shall be installed around ventilation fans, non-IC rated recessed light fixtures and active chimneys and metal flues. Exhaust vents shall conform to the RRS Section 2.6.5.

d. Horizontal attic accesses **shall** be blocked off or dammed around with rigid materials to prevent insulation from entering the access opening. The dam **shall** be constructed of materials capable of supporting the weight of an adult and extend above the level of the insulation.

e. Attic access doors and stairwells **should** be insulated.

f. Baffles or chutes **shall** be installed to prevent insulation from contacting the roof deck or blocking eave/cornice vents.

Commentary: Insulating ceilings (or attic spaces) is one of the most cost-effective measures to increase the dwelling's energy efficiency and decrease the occupant's heating/cooling energy consumption in the long term. Properly installed, ceiling insulation (along with proper air sealing) will provide the occupant with decades of improved comfort and savings. Therefore, every effort must be made to thoroughly insulate ceilings over each conditioned area of the dwelling, including open joist attics, knee walls, knee wall floors, knee wall slopes, enclosed attics, shed roofs, etc. As noted above, properly insulating ceiling areas requires a thorough inspection to locate and seal uncontrolled air leakage pathways and to locate and address heat producing mechanical devices and other potential problems that can compromise the effectiveness of the job. Also, a thorough post-installation inspection is needed to ensure that the insulation coverage is complete and meets the required R-value(s).

2.6.6 SIDEWALL INSULATION

Standard: Sidewalls that separate conditioned spaces from the outside or from unconditioned spaces in existing dwellings **should** be insulated as close as possible to the following standards:

LOCATION	INSULATION VALUE	TYPE OF INSULATION
Enclosed Wall Cavities	3.25 to 3.75 lbs/cu.ft. or 1.6 lbs/cu.ft.	Blown Cellulose or Blown Mineral/Glass
Open Wall Cavities	R-11 to R-19	Batt

Sidewalls that separate conditioned spaces from the outside or from unconditioned spaces in new construction and room additions **shall** be insulated in accordance with the IECC.

Sidewall insulation **shall** be installed according to the manufacturer's installation instructions and the IECC. In addition, blown-in type insulation **shall** be installed according to the following practices:

a. Drilling through wood shakes, fiberboard, steel, aluminum or vinyl exterior wall covering materials **shall not** be allowed. Wood lap siding **should** also be removed rather than drilled through. Instead of drilling through exterior wall covering materials, the materials which can be feasibly removed **shall** be removed prior to accessing the wall cavity and then re-installed after insulating. If removal is not practical, interior wall surfaces **should** be drilled and then properly repaired and sealed after insulating.

Note: Drilling through interior wall surfaces creates dust and techniques to minimize the creation of dust and to contain it **shall** be used. Also, if the wall surface to be drilled contains Lead-Based Paint, then, Lead-Based Paint safe work practices **shall** be required.

b. If each wall cavity is drilled with one hole per story, the insulation **shall** be installed through a tube to ensure that it reaches the top and the bottom of the cavity. If two holes per cavity are drilled, tubing is unnecessary, however, the distance between the holes **shall** not exceed 5 feet. In either case, each cavity **shall** be probed to locate fire stops or other obstructions and additional holes drilled as needed.

c. The insulation **shall** be installed to achieve "compaction" or a density sufficient to prevent the insulation from settling and to prevent air movement within the cavity.

d. If interior-generated moisture is a concern, pathways that allow warm moist air to enter the wall cavities **shall** be sealed and interior perimeter wall surfaces **shall** be painted with vapor diffusion retarder paint.

Commentary: Sidewall insulation, like ceiling insulation, is one of the most cost-effective energy efficiency measures providing long term comfort and savings. Again, every effort must be made to thoroughly insulate the exterior sidewalls on frame constructed dwellings. As noted above, considerable care is needed installing blown-in type insulation in order to achieve complete coverage and proper density. Also, a thorough post-installation inspection is needed to ensure that the job was done properly.

2.6.7 FLOOR INSULATION

Standard: Floors above open crawlspaces and unconditioned enclosed crawlspaces and cellars in existing dwellings **should** be insulated as close as possible to an R-19. Floors above open crawlspaces and unconditioned enclosed crawlspaces and cellars in new construction and room additions **shall** be insulated in accordance with the IECC. The insulation **shall** be installed according to the manufacturer's installation instructions, and the IECC. There **shall** be complete coverage, particularly around cross bracing, and the insulation **shall** be firmly supported and not overly compressed.

Commentary: OCD understands that in existing dwellings not all floors over unconditioned spaces can be insulated. For example, some crawlspaces and cellars may be too low to provide an adequate working space (e.g. less than 24 inches of continuous clearance). Floors above unconditioned basements are not required to be insulated because, in many cases, unconditioned basements contain heating equipment and heat distribution ducts or pipes, and are not ventilated or otherwise open to the outside like crawlspaces.

2.6.8 FOUNDATION PERIMETER WALL INSULATION

Standard: Crawlspace foundations and basement foundation perimeter walls in existing dwellings **should** be insulated.

Enclosed, conditioned crawlspace foundations and basement foundation perimeter walls in new construction and room additions **shall** be insulated in accordance with the IECC. The insulation **shall** be installed according to the manufacturer's installation instructions, and the IECC.

Commentary: Insulation around an existing foundation is not required in all cases. In some circumstances, its cost-effectiveness is doubtful, particularly if the interior

temperature of the basement or enclosed crawlspace is low to begin with. In other cases, such as when a crawlspace is ventilated so that there is no temperature difference between the outside and the inside, foundation insulation is clearly not cost-effective.

2.7 ATTACHED STRUCTURES: EXTERIOR PORCHES, BALCONIES, AND UNINHABITABLE ADDITIONS

Standard: Foundations, walls, floors, roofs and active electrical system devices of attached porches, balconies and uninhabitable additions **shall** meet the requirements of the appropriate section of the RRS. Porches, balconies or raised floors located more than 30 inches above the floor or grade **shall** have guardrails. New guardrail details and size **shall** conform to the RCO. The floors **shall** be even, and without tripping hazards, and the entire structure **shall** be free of deterioration. Bare wood **shall** be properly sealed and all lead-based paint hazards **shall** be properly addressed in accordance with the RRS, Chapter

Exception #1: To control costs, grantees can choose not to correct all of the sub-standard conditions related to attached structures, and this is acceptable. However, all conditions presenting a threat to the health and safety of the occupants or the durability of the dwelling **shall** be corrected.

Exception #2: To control costs, grantees have the choice of demolishing a severely deteriorated attached structure rather than rehabilitating it, provided the structure is not critical to the occupant's use of the dwelling and that demolition does not violate the historical or architectural integrity of the dwelling. Prior to demolition, grantees **shall** obtain written permission from the owner and, if necessary, from the appropriate state/local authority having jurisdiction over historical or architectural matters. A copy of each written permission form **shall** be maintained in the case file. If an attached structure is removed, the area(s) of the dwelling or site to which the demolished structure was attached or located **shall** be repaired to the extent required by the appropriate section of the RRS. For example, exterior wall framing exposed by removing a dilapidated shed **shall** be covered with siding compatible with the surrounding siding material.

Commentary: OCD expects attached structures such as; porches, balconies, utility rooms, garages, etc. to be safe and reasonably sound. For example, existing electrical service to such areas must meet the requirements of the RRS and the structural components of the addition must be free of obvious hazards and deteriorating conditions.

However, as noted in Exception #1, OCD recognizes that uninhabitable areas do not need to be rehabilitated to the same degree as habitable areas. OCD also recognizes in Exception #2, that, in some cases, it can be more cost-effective to remove an unused severely deteriorated addition than to rehabilitate it.

2.8 INTERIOR AND EXTERIOR STAIRS

2.8.1 STAIRS

Standard: All stairs **shall** be safe and structurally sound. All treads and risers **should** be of the same size, in order to prevent tripping. All stairways **shall** have illumination in accordance with the RCO. New stairs and ramps **shall** conform to the requirements of the RCO, and to the extent possible, meet the RCO requirements for headroom, slope, width, maximum riser height, minimum tread width, landings, etc.

2.8.2 HANDRAILS

Standard: All existing stairs with four or more risers **shall** have a handrail on at least one side, and all handrails **shall** be safe and securely and firmly fastened in place. All handrails **shall** be easily graspable by the occupants. All handrails **shall** return to the wall, floor, or post so that they do not constitute a hazard to pedestrians. Treated 2"x 4"s **shall not** be installed for the purpose of a handrail, but proper handrails **shall** be required. All new handrails **shall** meet the height, continuity, and grip size requirements of the RCO

2.8.3 GUARDRAILS

Standard: All stairs with open landings, balconies, or porches more than 30 inches above the grade below **shall** have guardrails. All guardrails **shall** be safe and securely and firmly fastened in place. All new guardrails **shall** meet the requirements of the RCO.

Commentary: Stairs that are poorly constructed or in poor condition present tripping and falling hazards to all who use them. It is important for the treads, risers, handrails and guardrails to be sound and firmly secured and for the stairs themselves to be sound and firmly secured to the structure.

2.9 NEW CONSTRUCTION

Standard: New room additions or new dwellings constructed on the site **shall** conform to local code requirements, and to all specifically applicable codes within the RRS. New room additions and new dwellings constructed on the site **shall** also conform to the requirements of all applicable chapters and sections of the most recent State of Ohio adopted versions of the following codes:

- Residential Code of Ohio
- Ohio Plumbing Code
- Ohio Mechanical Code
- National Electric Code (NFPA 70)
- International Energy Conservation Code
- International Fuel Gas Code

Commentary: Occasionally the need arises to construct a new room addition to relieve overcrowding or to provide a necessary facility such as an indoor bathroom or furnace utility room, etc. Also, it may be appropriate to construct an entirely new dwelling on the site to replace one that cannot be rehabilitated. Because such structures are entirely new without the limitation caused by working within an

existing structure, OCD requires that they will be planned and built to conform to the RCO, the above listed codes, and all local code requirements.

There are also standards covered within the RRS that are outside of the scope of the RCO and the other state adopted building codes. For example, Chapter 6 has standards relating to landscaping, fences, outbuildings, etc. These also apply to new construction projects.

2.10 MODULAR, MANUFACTURED, AND MOBILE HOMES

Standard: New modular dwellings, transported and installed on the site, **shall** meet the applicable requirements of the listed codes IN RRS 2.9, the same as for any stick built house. New manufactured units which bear a certification meeting 24 CFR Part 3280, the Manufactured Home Construction and Safety Standards as established by HUD, **shall** be considered by OCD to have met the requirements of the RRS, providing that their installation (including location, utility hook-ups, foundation, anchorage, etc.) **shall** meet the appropriate Chapters and Sections of the RCO, the above listed codes, the manufacturer's instructions, and all applicable local code requirements. All existing manufactured houses **shall** be installed on permanent foundations, and **shall** be subject to all of the rehabilitation requirements of the RRS, just like any other house. Mobile homes cannot be rehabilitated using the RRS. However, any repairs that are done to them using this document must meet the applicable RRS requirements, just like any other house.

2.11 GREEN BUILDING

Standard: All newly constructed dwellings **should** use green building (conservation minded) materials, methods, technology and design, where practical. All existing homes being rehabilitated **should** consider alternative approaches that use green building materials, methods, technology, and/or design when replacing systems or structural elements, where it is practical.

Commentary: Green building is the building of houses that are healthy for the occupants, and that help to protect the earth and to conserve the earth's resources. As environmental concerns continue to mount worldwide, integrating more sustainable practices and products into our projects becomes increasingly important. Buildings consume very large quantities of the earth's resources in their construction and daily operation. Following are five principles of sustainability that may be helpful to potentially integrate into your construction practices.

1. Optimize use of the sun and wind:

a. Design and orient the house and/or windows to minimize summer afternoon solar heat gain and to optimize winter solar heat gain. Wide overhangs, special coatings on the windows, and consideration of house and window placement are all examples that can be incorporated into your projects.
b. Situate the house to take into consideration the prevailing breezes and winds at various time of the year.

c. Plant shade trees and shrubs around the house to provide shade in the summer. This also releases oxygen into the atmosphere and has other beneficial environmental impacts. Only limited landscaping can be done. See the RRS, Chapter 6 for more details.

2. Improving indoor air quality:

Indoor pollutants range from toxins found in building materials, such as formaldehyde and lead to allergens such as mold, bacteria, dust mites, and fungus. These pollutants may cause health problems for the occupants. Here are some measures that can be taken to improve indoor air quality.

a. Select materials that limit out-gassing of volatile organic compounds, have no toxic properties, and do not shed fiber or dust.
b. Seal off the garage from the house, or take other steps to eliminate fumes from cars and lawn mowers, such as installing an exhaust fan in the garage.
c. Choose ventilation systems that remove dirt, dust, moisture, humidity, and pollutants.
d. Eliminate moisture sources that produce mold, mildew, and fungus.
e. Install exhaust fans in the kitchen and bathrooms to remove gases like carbon monoxide and water vapor that can cause molds to grow.
f. Use water-based paints, finishes, and sealants. Some milk-based paints are also available.
g. Select solid woods for cabinetry, trim, and other solid surfaces, rather than pressed woods or composites that may contain formaldehyde or other toxic chemicals.

3. Use the land responsibly:

a. Purchase lots located close to public transportation and community services.
b. Cluster houses together on smaller lots to conserve open space.
c. Limit the use of impervious surfaces to reduce storm water runoff and contamination of local water sources.

4. Create high performance and moisture resistant houses:

a. Create a building envelope with more durable and energy efficient materials
b. Seal cracks and gaps in the building envelope to reduce drafts, keep moisture out, and keep conditioned air in.
c. Balance room temperatures to make occupants more comfortable at more moderate temperatures.
d. Increase insulation to decrease energy usage and lower utility costs.
e. Follow energy star guidelines in the construction or rehabilitation of a house and in the selection of appliances, lighting options, etc.

5. Wisely use the earth's natural resources:

The earth has a finite amount of natural resources, and it is our responsibility to make them last. It is also up to us to use these resources in a way that is not detrimental to the environment or our health. Selecting green materials typically involves an assessment of a product's environmental impact over its life cycle. This process tracks the raw materials used to make a product, its manufacturing process, its transportation, its performance when it is used, and its disposal, reuse, or recycling options. When choosing materials and products look for;

a. High levels of renewability, reusability, and durability.
b. Low levels of embodied energy (the energy required to extract, process, and transport materials).
c. Low levels of environmental impact, the negative effects on outdoor and indoor environments.
d. Repair leaky faucets and install low-flow showerheads and faucets.
e. Choose carpeting and other textiles made from natural fibers, such as cotton or wool, which are untreated and free of toxins such as pesticides or chemical cleaners.
f. Use flooring, cabinets and other hard surface component products made from rapidly renewable or sustainable resources, such as agricultural waste composite board, bamboo or cork.
g. Reuse materials such as brick, stone, glass, tile, wood or metal.
h. Replace old appliances that are not energy efficient.
i. Buy locally produced products and materials whenever possible to reduce additional energy use and pollution associated with transportation.
j. Eliminate waste by choosing products that are biodegradable or recyclable.
k. Find uses for construction waste, such as shredding wood scraps for mulch.
l. Use certified wood harvested from sustainable managed forests.

CHAPTER THREE

HEATING, VENTILATION, AND AIR CONDITIONING SYSTEMS

GENERAL REQUIREMENTS

The HVAC system of the house, in conjunction with the other house systems, is responsible for providing a comfortable living environment for the occupants. To be effective, the HVAC system must accomplish the following:

- provide a steady source of pure conditioned air, which is at a temperature that is comfortable to the occupants in every part of every habitable room of the house;
- protect the other components of the house, such as water pipes, from freezing;
- control ventilation quantities and indoor air quality for each habitable room of the house;
- require a type and quantity of fuel that is affordable and available to the occupants; and
- be free of any contaminants that will negatively affect indoor air quality.

The HVAC system is not capable of accomplishing these tasks on its own, but must work with the other components of the house, as a system, to effectively accomplish these tasks. For example, a heating system cannot provide a steady source of warm air to a room that does not have walls, or that has walls incapable of containing the warm air. Therefore, the house must be viewed as a system, with the various components working together to effectively meet the needs of the occupants.

3.1 SOURCE OF HEAT

Standard: Each house **shall** have a safe heating source, capable of bringing and holding each habitable room at a temperature of 70 degrees, 95 percent of the time.

Commentary: The term habitable room, as it is used here, means rooms in which the occupants of the house routinely eat, sleep, and/or live.

3.2 CHIMNEYS AND FIREPLACES (SOLID FUELS)

3.2.1 SAFE SOLID FUEL CHIMNEYS

Standard: All active solid fuel-burning (i.e. wood or coal burning) equipment **shall** be connected to a safe chimney. Masonry and factory-built chimneys connected to active fireplaces or fireplace stoves **shall** be structurally sound and form an unobstructed and continuous flue to safely conduct flame, heat, combustion gases and smoke to the outside. Chimney flues venting solid fuel burning equipment **shall** be designated for solid fuels only. Factory-built chimneys **shall** conform to the conditions of their listing and the manufacturer's installation instructions.

Active masonry or factory-built chimneys **shall** be inspected for flue blockages, excessive creosote build-up, inappropriate or unsafe materials, loose, missing or cracked sections, improper flue linings and improper installation and listing. Problems noted as a result of the inspection **shall** be corrected, or, if it is not serving as the primary heating source, taken permanently out of operation. Repairs and replacements **should** conform to the RCO, and/or the manufacturer's installation instructions.

3.2.2 FIREPLACE AND SOLID FUEL APPLIANCE SAFETY

Standard: Active masonry and factory-built fireplaces and fireplace stoves **shall** be structurally sound, capable of safely combusting the appropriate fuel and properly connected to a safe chimney. Factory-built fireplaces and fireplace stoves **shall** conform to the conditions of their listing and the manufacturer's installation instructions. They **shall** be inspected for missing, broken, or loose fire brick, broken or severely rusted metal structural elements or dampers, unsafe operation including excessive back drafting, an inadequate source of combustion air, inadequate clearance to combustible materials, and inadequate protection from sparks and logs falling out of the firebox. Problems noted as a result of the inspection **shall** be corrected. Repairs and replacements **should** conform to the RCO, and/or the manufacturer's installation instructions.

3.2.3 REPLACEMENT OF SOLID FUEL APPLIANCES

Standard: Active solid fuel-burning fireplaces and fireplace stoves that cannot be made safe or that cannot be connected to a safe chimney **shall** be replaced if the stove is the primary heat source, and the chimney vent connection **shall** be replaced with a proper chimney. These replacements **shall** conform to the RCO, and/or the manufacturer's installation instructions. Alternatively, if no other primary heat source is present, an alternative heating system and fuel source **shall** be installed. However, before fuel sources are changed, the lifestyle and affordability of the household **shall** be considered.

Commentary: The safe operation of an active (i.e. used by the occupant) solid fuel fireplace and chimney is an important health and safety concern. Therefore, a careful inspection of the solid fuel-burning equipment and the chimney to which it is connected is needed to determine if repair or replacement is necessary.

3.3 CHIMNEYS AND VENTS (NATURAL GAS, PROPANE, OIL)

3.3.1 GAS AND OIL BURNING APPLIANCE CHIMNEY OR VENT GENERAL REQUIREMENTS

Standard: All gas or oil burning heating equipment **shall** be connected to a safe chimney or vent. Masonry chimneys, factory-built chimneys and all vent system components, including; draft hoods, vent dampers, draft regulators, vent connectors and vents **shall** be structurally sound and properly connected to form an unobstructed continuous flue to safely conduct combustion gases and heat to the outside.

3.3.2 GAS-FIRED APPLIANCE VENTING REQUIREMENTS

Standard: All gas appliances and equipment **shall** be connected to a chimney that conforms to the requirements of the RCO, and the equipment manufacturer's instructions. The chimney **shall** be thoroughly inspected for proper size, clearance, types of materials, slope and other requirements pertaining to a safe installation, based upon the requirements of the RCO, and the equipment manufacturer's instructions. All problems noted **shall** be corrected, or, alternatively, if it is not the primary heating source, the equipment **shall** be taken permanently out of operation.

3.3.3 OIL-FIRED APPLIANCE VENTING AND CHIMNEY REQUIREMENTS

Standard: All oil burning appliances **shall** be connected to a chimney that conforms to the requirements of the RCO, and the equipment manufacturer's instructions. The chimney **shall** be thoroughly inspected for proper size, clearance, types of materials, proper operation of any draft damper, slope and other requirements pertaining to a safe installation, based upon the requirements of the RCO, and the equipment manufacturer's instructions. All problems noted **shall** be corrected, or, alternatively, if it is not the primary heating source, the equipment **shall** be taken permanently out of operation.

3.3.4 CONVERTING A SOLID FUEL CHIMNEY TO FOSSIL FUELS

Standard: When converting a chimney that has been used for venting solid fuels to serve as the venting for equipment burning fossil fuels, an approved chimney lining system designed for the type of fuel to be used shall be specified for installation, and a thorough cleaning of the chimney shall be performed before installing a new liner, removing all creosote from inside the existing chimney to prevent pitting and deterioration of the liner to be installed.

Commentary: OCD requires that chimneys, vents, vent connectors, mechanical and automatic vent dampering devices be inspected for missing, cracked, constricted, or disconnected or loose components, and to also ensure proper installation, and to determine if repairs are needed.

Masonry and factory built chimneys must conform to the condition of their listing and design, be properly installed, properly sized, and draft properly for the number of heating appliances connected to them, per the manufacturer's instructions.

3.4 HEATING EQUIPMENT (ALL FUELS)

3.4.1 COMBUSTION SAFETY

Standard: Fuel-burning equipment **shall** combust fuel safely and operate as close to the designed Annual Fuel Utilization Efficiency (AFUE) as possible. Flue gases (oxygen and carbon monoxide), stack temperature and smoke **shall** be within acceptable limits.

A pre- and post-rehab draft test and carbon monoxide test **shall** be performed on all combustion appliances, including gas cooking stoves. For specific testing requirements, see RRS 3.5.

Exception: Testing of emergency heating sources that will not be used on a regular basis is not required.

Commentary: This is to clarify what we mean by pre-and post-rehab. With the exception above, all equipment will need to be tested as outlined in RRS 3.5. Existing units that are clearly going to be replaced (see RRS 3.4.5) will not need to be tested. The new equipment that is replacing it will need to be tested following its installation. All existing combustion appliances that may be kept in place will need to be tested, and brought to acceptable standards. If they cannot be brought to acceptable standards, then they will need to be replaced with new equipment which will also need to be tested.

3.4.2 PROPER TYPE OF FUEL

Standard: The equipment **shall** be designed and listed for the type of fuel utilized, or to which it is connected.

3.4.3 PROPER LOCATION

Standard: The equipment **shall** be designed and listed for the location in which it is installed. All equipment installed in garages **shall** comply with the RCO. When equipment is found to be located in inaccessible locations such as attics and crawlspaces, the equipment **should**, if possible, be relocated to allow better accessibility to the equipment.

3.4.4 ACCESSIBILITY AND CLEARANCES

Standard: The equipment **shall** be accessible for inspection, service, repair and replacement without removal of permanent construction, and it also **shall** be properly clear from combustible materials. Clearances **shall** conform to the applicable section of the RCO, and the manufacturer's installation instructions, as applicable.

3.4.5 WHEN TO REPLACE HEATING EQUIPMENT

Standard: Replacing existing heating equipment that is unsafe, inefficient or likely to fail in the near future is a frequent occurrence in rehabilitation. The reason for replacement **shall** be documented, and heating equipment **shall** be replaced when any of the following conditions are present:

a. The equipment is unsafe and not easily repairable. For example, the heat exchanger is cracked and no longer under warranty, or the problems are too numerous to justify the repair expense.

b. The equipment is located in an area inappropriate to its listing and cannot be moved to an appropriate area due to its design.

c. The equipment combusts fuel very inefficiently and due to design, cannot be retrofitted such as replacing an old fuel oil burner with a more modern flame retention burner. For example, OCD recommends replacing gas-fired heating equipment that has a verified Steady-State Efficiency (SSE) of 60 percent or less.

d. The primary heating equipment is an unvented fuel-burning space heater. Replacement space heaters shall be vented.

e. The primary heating equipment is an unsafe, electrical baseboard heater.

Aside from the reasons listed above, heating equipment **should not** be replaced.

3.4.6 SIZING REPLACEMENT EQUIPMENT

Standard: Replacement heating and cooling equipment **shall** be properly sized in accordance with the ACCA's Manual J or other recognized methodology. Data for heat load/loss calculations **shall** be based on post-rehabilitation conditions.

The replacement heating equipment **shall** be a proper fit in size to any other existing portions of the system, i.e. fuel lines carrying the appropriate quantity, type, and pressure of fuel, distribution and return systems carrying the appropriate cfm's to each location, air conditioning equipment rated to match the furnace, properly sized electrical circuits and equipment, etc. Where the other equipment is improperly sized to fit the new equipment, it **shall** also be replaced or modified so that there is a proper fit.

3.4.7 INSTALLATION OF REPLACEMENT HEATING EQUIPMENT

Standard: Replacement heating equipment **shall** be installed to conform to the RCO and the NEC, as appropriate to the fuel source, and the manufacturer's installation instructions.

Commentary: The safe and efficient operation of heating and cooking equipment is not only an important health and safety concern but it is also an important factor bearing on affordability, because fuel consumption can significantly contribute to the operating costs of the home.

The basic information and formulas used to determine heat load and equipment output is outlined in Manual J, Residential Load Calculation. The equipment should not only be sized properly to meet the heating or cooling load requirements of the home but it should also be an energy efficient model and fit well with considerations to the client's lifestyle. OCD recommends a cost-benefit approach to selecting replacement heating and cooling equipment. In other words, the "cost" of the equipment should consider not only its installation cost but also its long-term operating cost. Methodology for comparing the cost of various equipment models is outlined in the GAMA Consumer's Directory of Certified Efficiency Ratings.

3.4.8 USE OF 90+ PERCENT EFFICIENCY FURNACES

Standard: When a new gas-fired, forced air furnace is to be installed, the furnace **shall** have a minimum efficiency rating of 90 percent. The new furnace **shall** be of a two-pipe design, drawing all air for combustion from outside.

3.4.9 ELECTRICAL RECEPTACLE AND LIGHTING

Standard: Equipment **should** have a permanent electrical receptacle, and indoor equipment **should** have a lighting fixture provided near the equipment, which **should** be controlled by a switch. All replacement equipment **shall** have the above items near the equipment.

3.4.10 UNVENTED EQUIPMENT

Standard: Unvented fuel-burning primary heating equipment (e.g. unvented gas or oil space heater) **shall not** be permitted as a primary heat source. Unvented heaters other than those that are the primary heat source **shall** be made to comply with the RCO or be removed.

3.4.11 COMBUSTION AIR

Standard: Fuel-burning equipment **shall** be provided with sufficient combustion air drawn from proper locations in conformance to the RCO, and the manufacturer's installation instructions.

Commentary: A sufficient supply of combustion and draft dilution air is critical to the efficient operation of non-direct vent fuel-burning heating equipment and to the health and safety of the occupants. If the building is tightly constructed or if the heating equipment is located in a confined room or space, additional combustion air and draft dilution air must be provided. A confined room or space is defined as having less than 50 cubic feet of space per 1,000 BTU/hr input for each fuel-burning furnace and water heater in the space. Additional air may be provided from inside the building, outside the building or in combination, as described in CABO.

3.5 EQUIPMENT INSPECTIONS

Existing heating equipment which is not to be replaced **shall** be carefully inspected to determine operating safety and efficiency. Problems noted as a result of the inspection must be corrected by repairing, cleaning and tuning, or replacement of the equipment. OCD expects that gas fuel-burning heating equipment **shall** be inspected according to the recommended procedures contained in the International Fuel Gas Code or NFPA 54. OCD also expects that, regardless of fuel type, the heating equipment inspection **shall** be in compliance with the requirements of RRS Appendix 3-B, and **shall** meet the specific requirements for each fuel type as outlined in Appendix 3-B-1 for electric heating equipment, Appendix 3-B-2 for Fuel Oil heating equipment, and Appendix 3-B-3 for solid fuel burning equipment.

Commentary: In addition to "tuning-up" the equipment, installing devices to improve operational efficiency; such as flame retention burners (oil) may be cost-effective improvements to replacing an otherwise safe heating appliance.

3.6 COOLING EQUIPMENT (AIR CONDITIONING)

3.6.1 INSTALLATION REQUIREMENTS FOR NEW EQUIPMENT AND SYSTEMS

Standard: Cooling equipment newly installed by the rehabilitation program **shall** operate safely and efficiently, and **shall** be properly installed according to the RCO, and sized to fit the furnace, which **shall** be sized according to the ACCA's Manual J or other recognized methodology.

If cooling equipment exists and a new furnace is to be installed, a new coil **should** be installed, which matches the unit to be installed. If the existing coil is in good condition, is compatible and properly sized to the new unit, it can be left in service. If the budget does not allow for the installation of a new unit, then the existing cooling system may be entirely removed.

3.6.2 WHEN TO REPLACE OR INSTALL COOLING EQUIPMENT

Standard: Cooling systems are not required to be installed by the RRS, but new systems could be installed if funds allow, and **should** be installed where excess heat may be an undue stressor on the occupants or contribute to health issues. A central cooling system could also increase affordability if several inefficient window air conditioners are currently in use. Existing cooling systems **shall** either be disabled, or inspected and repaired according to the guidelines in RRS 3.6.3.

3.6.3 REQUIRED INSPECTIONS AND REPAIRS TO COOLING SYSTEMS

Standard: For existing cooling equipment that is to be kept in service, a thorough inspection **shall** be required, which shall comply with the requirements of RRS Appendix 3-C. New cooling equipment **shall** also comply with the requirements of RRS Appendix 3-C.

Commentary: The installation of new cooling equipment is not required, but must be considered as an option to address the health, safety, and affordability of the occupants, or as a means to reduce energy consumption. Existing cooling equipment could be repaired or disabled at the grantee's option. Special consideration needs to be given to properly size the return system, and increasing the amount of return air may be required.

3.7 HEATING AND COOLING DISTRIBUTION SYSTEM

3.7.1 GENERAL REQUIREMENTS

Standard: The distribution system **shall** be appropriate for the type of heating equipment to which it is connected, **should** provide an adequate supply of conditioned air to

each habitable room and **shall** provide an adequate amount of air returning to the heating equipment. Ducted (gravity or forced air) and piped (hydronic) distribution systems **shall** be adequately sized, located, sealed, secured, protected, balanced, and insulated to provide for the efficient unobstructed flow of supply and return air.

3.7.2 NEW DISTRIBUTION SYSTEM REQUIREMENTS

Standard: Newly installed heating and/or cooling distribution systems **shall** comply with the requirements of the RCO, and new duct systems **shall** comply with ACCA Manual D.

3.7.3 INSPECTION AND REPAIR/REPLACEMENT REQUIREMENTS

Standard: Safe and efficient heating/cooling equipment which is connected to a defective distribution system cannot create an environment that is both comfortable and affordable to the occupant. Therefore, the distribution system **shall** be inspected to determine if it is operating effectively. The inspection **shall** ensure that the distribution system complies with the requirements of ACCA, Manual D, or other recognized methodology.

Commentary: To help determine if a forced-air system supply air and return air is adequately balanced, OCD recommends measuring the temperature rise, for heating applications, by inserting a thermometer in the supply and return ducts within 12 inches of the plenums while the furnace is operating. If the temperature difference between the supply air and the return air is between 40°F and 70°F (PMI), the system is likely adequately balanced. In addition, the unobstructed area of the return air and the supply air ducts must meet the size requirements of ACCA Manual D.

In general, there must not be less than 2 square inches of return and supply for each 1,000 BTU/hr input rating of the furnace or, if air conditioning is present, no less than 6 square inches of return and supply for each 1,000 BTU/hr input rating of the furnace. However, the location of the supply and return ducts is also an important consideration. For example, rooms with tight fitting closed doors and no return register may cause forced-air systems to be unbalanced.

To restore balance (and reduce room over-pressurization) doors may need to be under-cut or grilles which connect the room with the rest of the house may need to be installed. If there is a need for grilles to be installed, OCD suggest grilles be installed on common interior walls. Precaution should be taken to seal any wall cavity at the top and bottom when considering this type of application.

If replacing the heating and/or cooling equipment involves changing the heating and/or cooling distribution system (e.g. replacing space heaters with a ducted forced air system), or changing fuel sources (e.g. switching from fuel oil to electricity), OCD recommends taking a cost benefit approach, as well as considering the clients lifestyle.

3.8 WATER HEATING EQUIPMENT (ALL FUELS)

3.8.1 NEW INSTALLATIONS

Standard: The new installation of water heaters shall conform to the OPC.

3.8.2 GENERAL REQUIREMENTS

Standard: Water heating and storage equipment **shall** meet the following conditions:

a. All houses rehabilitated shall have domestic water heating equipment, and this equipment **shall** be capable of meeting the requirements of the IPMC Section and the RCO. All water heating and storage equipment, which is not an obvious candidate for replacement, **shall** be inspected to ensure safe and efficient operation, and cleaned and tuned, if necessary.

b. The equipment **shall** be designed and listed for the location in which it is installed. All equipment installed in garages **shall** comply with the RCO. All fuel-fired water heating equipment located in garages **shall** be placed a minimum of 18 inches above the floor and be protected from damage by vehicles. If the fuel-fired water heating equipment is located in proximity to the storage of flammable liquids or materials, it **shall** be placed a minimum of 18 inches above the floor. Fuel-burning water heaters **shall not** be located in storage closets, bedrooms, bathrooms or other occupied rooms usually kept closed, unless in a sealed enclosure which provides adequate combustion air and prevents combustion air from being taken from the living space, or the equipment is a direct-vent model.

c. The equipment **shall** be accessible for inspection, service, repair and replacement without removal of permanent construction.

d. The equipment **shall** be properly connected to the hot and cold water supply lines, including a shut-off valve on the cold water supply as required in the OPC. As required in the OPC, a dielectric union or non-conductive connector **shall** be used when dissimilar metals are joined.

   Where required to prevent undue pressure from expansion where a pressure reducing valve or a backflow prevention device is installed in the system, an expansion tank **shall** be installed in accordance with OPC.

e. The equipment **shall** have an approved (rated and stamped) pressure and temperature relief valve as required in the OPC. The relief valve setting **shall** not exceed the tank's rated working pressure. The equipment **shall** be equipped with a safety discharge pipe of 3/4 inch rigid pressure and temperature approved pipe which terminates with an air gap and comes to within 6 inches of the floor, or empties into a plumbing fixture, floor drain or some other approved point of discharge as required in the OPC. CPVC **shall not** be used for this application.

f. Replacement water heaters **shall** be properly sized to the needs of the household. Sizing calculations **shall**, at a minimum, conform to the water

heater sizing calculation outlined in the GAMA Consumers Directory of Certified Efficiency Ratings (GAMAnet.org).

g. Fuel-burning equipment **shall** be properly clear from combustible materials. Clearances **shall** conform to the RCO, and the manufacturer's installation instructions.

h. Fuel-burning equipment **shall** be safely connected to an approved venting device directly to outside air. Vents **shall** be free of obstructions, cracks and holes, and provide sufficient draft to safely exhaust heat and combustion gases to the outside. Vents and chimneys **shall** be properly sized to the number and type of heating appliances. Repairs or replacements to venting system components **shall** conform to the RCO, and the manufacturer's installation instructions. Also see the requirements for vents and chimneys at RRS 3.3.

i. Fuel-burning equipment **shall** be provided with an adequate supply of combustion air in accordance with the RRS 3.4.11.

j. Fuel-burning equipment **shall** combust fuel safely and efficiently. Flue gases (oxygen and carbon monoxide), stack temperatures and smoke **shall** be within acceptable limits.

A pre and post rehab draft test and Co test **shall** be performed on all combustion appliances. For specific testing requirements, see RRS 3.5.

Commentary: Safe and properly installed water heating equipment and an adequate supply of hot water are critical to a healthy habitable environment. To provide an adequate supply of hot water, the water heating equipment must be capable of heating water to such a temperature as to permit an adequate amount of water to be drawn at every required sink, lavatory basin, bathtub, shower, and laundry facility or other similar unit, at a temperature of not less than 120° F at any time needed under normal usage.

3.8.3 WATER HEATER INSPECTION/REPLACEMENT

Standard: To ensure that the existing water heating equipment which is not to be replaced is installed properly and operating safely, the equipment **shall** be thoroughly inspected. The water heating equipment inspection **shall** follow the inspection checklists in Appendix 3 - D, and the water heater **shall** be in compliance with the requirements of this Appendix.

Commentary: OCD requires the replacement of water heating equipment that has a leaking or severely corroded tank, that is not repairable at a reasonable cost, or that is located in a prohibited area and cannot be made to conform. Installing the right size and model water heater is important for ensuring that the occupants receive an adequate supply of hot water at a reasonable operating cost.

OCD recommends a cost-benefit approach and thought given to energy efficiency and affordability in selecting replacement water heaters. The "cost" of the equipment should consider not only its installation cost but also its long-term operating cost. Often the incremental increase in the cost of high Energy Factor (EF) rated equipment is off-set within a few years by the fuel savings achieved

over low EF rated equipment. Methodology for selecting properly sized water heaters and for comparing the cost-effectiveness of various equipment models is outlined in the GAMA Consumer's Directory of Certified Energy Ratings. Installation costs and particular venting difficulties must also be considered.

3.9 FUEL-GAS PIPING

Standard: The fuel-gas piping system **shall** be free of leaks, with each section properly sized for all of the appliances connected to it in accordance with the ORC, Section G2413, and properly installed using approved materials and methods for the type of fuel carried in accordance with the ORC, Sections G2414 through G2424. All existing fuel-gas piping **shall** be inspected visually for defects in materials and installation and tested for leaks by means of a pressure test in accordance with the ORC Section G2417, or with a combustible gas leak detector. All leaks found as a result of the inspection **shall** be repaired and a second test **shall** be done to assure that no other leaks exist.

All other defects in materials, sizing and installation **shall** be corrected to ensure the following conditions:

a. Each fuel-gas operated appliance **shall** have a proper shut-off valve within 6 feet of the appliance (which must be in the same room as the appliance), as required in the ORC, Section G2420.5.

b. All fuel gas piping **shall** be properly supported, as required in the ORC, Sections G2418 and 2424.

c. The fuel-gas piping **shall** be properly sized for all of the appliances connected to it, as required in the ORC, Section G2413.

d. Sloping of pipes, drips, and sediment traps **shall** be installed in accordance with the ORC, Section G2419.

e. Appliances **shall** be connected to the fuel gas piping in accordance with the ORC, Section 2422.

f. All gas piping and fittings used in any new installations or repairs **shall** be of an approved type, in accordance with the ORC, Section G2414.

g. All work **shall** conform to the ORC Sections G2415 through G2424.

h. Old unused and disconnected fuel-gas piping located in accessible areas (e.g. basements) **should** be removed.

i. All new piping installations **shall** be tested, inspected, and purged in conformance with the ORC Section G2417.

Commentary: For the purposes of the RRS, the fuel-gas system includes all fittings and valves between the riser of the gas meter (or in the case of LPG systems, from the outlet of the first stage pressure regulator) and the equipment that they operate. A properly installed fuel-gas piping system is essential for ensuring the safety of the occupants and the proper operation of the fuel-gas burning equipment.

CHAPTER FOUR

ELECTRICAL SYSTEM

GENERAL REQUIREMENTS

The electrical system must provide for a safe adequate supply of electrical current to meet the needs of the occupants. To be safe and effective, the following must be true of the electrical system:

- The electrical system is properly grounded, free of hazards, and all components carrying current are properly secured in a manner that prevents contact by the occupants or the potential for electrical shock.
- The condition of all wiring, outlets, fixtures, and equipment is good, without deterioration or outdated components, free of electrical shorts or other fire hazards, and is safe, secure, and well maintained.
- The electrical current and voltage is adequate, consistent, and appropriate at each outlet, fixture, and piece of equipment for its intended use.
- All electrical conductors, fixtures, boxes, and equipment are properly sized and rated for their expected use and load.
- The system is designed to be adequate for the current use, as well as the expected future use, and takes into consideration the lifestyle of the occupants.
- Lighting and receptacle outlet needs are properly addressed, and the type of wire, receptacles, and fixtures are appropriate for the location.

Electricity is a potent force which can result in fire, shock, property damage, serious personal injury and even death. Therefore, the safety, capacity, and convenience of the wiring system are primary concerns. The electrical system is also vital to the proper operation of many of the other systems in a house. For example, the furnace, sump pump, and septic system aerator will not work properly, and can be damaged by an unsafe, improper, or inadequate supply of electricity.

4.1 WORK EXECUTION STANDARDS

4.1.1 QUALIFIED PERSONNEL

Standard: All persons involved in conducting inspections related to electrical work and in completing electrical work **shall** be qualified, and in compliance with RRS 1.8.1.

Commentary: Inspection of the existing electrical system to clearly evaluate the safety of the exterior wiring, service entrance cable, meter base, system grounding, the service equipment/distribution panel, premises wiring, fixtures, receptacles, switches, and equipment grounding must be conducted by qualified personnel, who understand the principles of electricity, are experienced in working on and inspecting residential electrical systems, who are familiar with the National Electrical Code, and who understand the hazards associated with electricity.

They must also be capable of evaluating the safety of the service; grounding protection; condition of existing wiring, fixtures, and equipment; determining potential electrical hazards; and the capacity of the service to meet the anticipated usage demand and convenience needs of the occupants.

OCD requires that installations to the electrical system including rewiring, repairing and updating of the existing electrical system be performed by a qualified person or persons, who understand the principles of electricity, are experienced in working on residential electrical systems, are familiar with the National Electrical Code and who understand the hazards associated with electricity.

Qualified personnel will generally be an electrical inspector, a licensed electrical contractor or electrician, whose primary occupation is residential electrical wiring; particularly if the installation is extensive. However, at a minimum, it must be a contractor or rehabilitation specialist who is familiar with proper residential wiring techniques, who understands the operation of the equipment, the hazards involved, all applicable codes and who will conduct work which results in an installation that meets the RRS and the requirements related to the proper mechanical execution of work. These standards apply to the inspections and to the rehabilitation work performed on the electrical system.

4.1.2 DETERMINING THE SCOPE OF WORK

Standard: Each of the standards contained in this chapter **shall** be used in determining the scope of work to be done. In addition, the requirements of the **National Electrical Code (NEC)** related to each standard **shall** be applied, along with the principles of safety, capacity, and convenience.

Commentary: In particular, health, safety and lifestyle issues must be addressed. There are three primary considerations during the evaluation and alteration of any electrical system.

Safety: The NEC contains provisions considered necessary for safe operation and installation; however, as with most codes, it states minimum requirements. Providing a safe electrical installation and minimizing hazards can be done by following the manufacturer's instructions, fully complying with any limitations placed on the use of equipment and permitting only qualified persons to perform electrical installations to ensure proper mechanical execution of the work.

Capacity: Unsafe conditions often occur because the initial wiring system was not properly planned and outlets added later overload the existing circuits. Adequate capacity reduces hazards such as overloaded circuits, conserves energy and contributes to a safer electrical system.

Convenience: There should be enough switches, fixtures and receptacles and they should be located so that the occupants will not have to walk in the dark or use extension cords.

The NEC is a minimum code and can be exceeded, particularly to address health, safety and lifestyle issues. For example, electrical system design needs to consider the placement of switches for disabled occupants, the relocation of service equipment for ready access by the elderly/disabled and the number of bathroom receptacles needed by a family. Do not skimp on the number of branch circuits or number of receptacles. Remember most updating could have been avoided by more liberal planning when the system was originally designed and installed.

4.1.3 EXECUTION OF NEW WORK

Standard: All new electrical work **shall** meet all of the applicable requirements of the NEC, and **shall** be adequate to meet the needs and safety of the occupants. Installation of all new electrical wiring, fixtures and equipment **shall** be done in a neat and workmanlike manner.

4.1.4 REPLACEMENT, ALTERATION OR REPAIR TO ELECTRICAL SYSTEM

Standard: The standards and installation methods of the NEC, Article 110-12, which covers the "mechanical execution of work" **shall** be followed for all re-wiring, repairing and system upgrading, and work **shall** be completed only by qualified persons using accepted engineering practice and principles of good workmanship. All portions of the electrical system, including equipment, wiring, boxes and fixtures **shall** be attached in a secure and tidy manner for both safety and aesthetic reasons. Installations **shall** be neat and closely adhere to those methods detailed in the NEC.

Commentary: If the existing electrical service and fixtures are in good, safe, and adequate condition, and meet the general system requirements, they possibly will not need to be replaced. Existing portions of the electrical system which are safe, adequate and functional and consequently are not being re-wired, repaired or upgraded do not have to comply with the current NEC codes.

4.1.5 SYSTEM DESIGN

Standard: The system **shall** be designed so that none of the circuits are overloaded and so that post-rehabilitation needs are met, and **should** allow for future expansion. Electrical load calculations **should** be done on each circuit, and a list of everything on each circuit, along with the calculated loads and circuit capacity **should** be placed in the project (client) file. All overloaded circuits **shall** be addressed by separating of the load, and the provision of additional circuits to carry the load.

4.1.6 EXISTING WIRING AND FIXTURES

4.1.6.1

Standard: **Condition of existing wiring and equipment:** Existing wiring and equipment **shall** be in proper operating condition; free of taped splices, loose connections, missing insulation, short circuits or unapproved grounds. Service conductors **shall** not be frayed, worn or bare. The service conductors, including the service drop, service lateral and service entrance **shall** be out of reach or properly buried; and properly connected and anchored to the home, and **should** be run in a neat manner. All existing wiring and equipment that is not made safe, as described above, **shall** be removed. All wiring terminations and connections **shall** be made in listed, approved, and covered junction boxes.

4.1.6.2

Standard: **Secure fastening of fixtures and equipment:** Fixtures, boxes, and other equipment **shall** be securely fastened to the framing members by mechanical means, such as bolts, screws, rivets or approved clips. No fixture or socket **shall** hang from a base by unsupported wiring. All existing receptacle, switch, and junction boxes **shall** contain a proper cover plate.

4.1.6.3

Standard: **Specific location requirements:** All wiring, switches, receptacles, fixtures, boxes, conduit, fittings and other equipment located in damp or wet locations, that is exposed to direct sunlight, or that is buried **shall** be appropriately weatherproof, designed and listed for the location, and protected from physical damage as required by the NEC.

Commentary: Equipment includes materials, devices, fittings, fixtures, appliances, and apparatus that are used as part of, or in connection, with an electrical installation.

4.1.6.4

Standard: **Use of improper electrical conductors:** Circuit extensions made with flexible cord wiring (e.g. lamp cord/zip cord) or other inappropriate conductor in lieu of permanent wiring **shall** be eliminated and replaced with properly sized permanent electrical conductors appropriate for the intended circuit as defined by the NEC.

4.1.7 STRUCTURAL INTEGRITY

Standard: In no case **shall** the structural integrity of the structural members be compromised (See the RRS, 2.2.3 and 2.3.3). New wiring **shall** be installed in a neat and workmanlike manner with all wiring run inside the walls, or if wall or ceiling cavities are not accessible, in properly sized and rated raceway or wire mold, secured along the sides or through joists with proper fasteners, flush to the surface, straight and securely attached in the wall or ceiling.

4.1.8 MATERIAL AND EQUIPMENT INSTALLATION

4.1.8.1

Standard: **Listing of material and equipment:** All material and equipment used in electrical installations **shall** be listed or labeled by a qualified electrical products testing laboratory such as “UL” or “CSA” as defined by NEC.

4.1.8.2

Standard: **Materials to be installed as intended:** Listed materials **shall** be installed per the intended use and location and per the manufacturer’s instructions as required by NEC Article 110-3 (b). All terminations **shall** be made in accordance with the manufacturers’ instructions provided on the equipment.

4.2 GROUNDING AND SYSTEM PROTECTION

4.2.1 GENERAL SYSTEM AND GROUNDING REQUIREMENTS

Standard: All electrical systems **shall** consist of a single phase three wire grounded neutral service entrance and **shall** provide system grounding and equipment grounding protection.

4.2.2 GROUNDING OF THE SERVICE ENTRANCE

Standard: The service panel **shall** be connected to the grounding electrode system and to an 8 foot galvanized or copper clad steel ground rod. All electrical panels **shall** meet the bonding requirements of NEC.

4.2.3 GROUNDING OF METAL WATER PIPE

Standard: Where present, even if the plumbing system is not metal where it leaves the house, metal water pipes **shall** be bonded to the grounding electrode as a means of grounding the plumbing system to prevent the piping and/or fixtures from becoming energized and hazardous.

4.2.4 GROUNDING OF ALL EQUIPMENT AND WIRING

Standard: Ungrounded household equipment and wiring is a serious hazard to the occupants, therefore, all wiring and equipment **shall** conform to the grounding requirements of the NEC. All connections of electrical cables, raceways and equipment **shall** comply with rules pertaining to grounding continuity.

Commentary: Even though the neutral wire is grounded at the utility pole, OCD requires the electric system to be grounded to an 8 foot galvanized or copper clad steel ground rod and a second grounding electrode as per the requirements of the NEC. For additional safety the service panel is to be bonded by a neutral metal strip and grounded by a bare copper wire connected to the grounding rod. The ground wires from the service entrance, branch circuits, and house ground are joined by this strip. The goal of system grounding is to tie all non-current carrying conductors together and place them at earth ground potential (0 volts) so that any stray current flows to the earth instead of through the wires and fixtures of the unit reducing electric shock and other hazards. This is done using the incoming neutral wire from the service and the neutral wire of the branch circuits.

This grounding method places the panel at ground potential of 0 volts so that it can never become a conductor if a hot wire touches it. This is especially important because all equipment grounding wires from every receptacle and every appliance, as well as the neutral wires, connect to the panel.

Equipment grounding includes grounding other metallic objects, such as piping systems or appliances that may become energized. The non-current carrying metal parts of electrical equipment and raceways that are metal (but are not designed to carry a current) such as metal boxes, washing machine frames and other appliances often become hazardous due to bad connections and can cause serious shock when touched. The three-pronged plug or cheater plugs will not always provide adequate equipment grounding. The NEC recognizes that pre-1978 grounding methods may be inadequate due to replacement of metal water pipes with plastic and that water pipe, in some cases, is no longer a reliable grounding electrode.

The NEC requires that the grounding be bonded together to form a “grounding electrode system”, therefore water piping that is not metal where it goes below ground must be supplemented by an additional electrode such as a reinforcing rod, metal frame of the building, or a grounding ring.

4.3 SERVICE ENTRANCE AND EQUIPMENT – MAIN PANEL DISTRIBUTION CENTER

4.3.1 MINIMUM SERVICE SIZE AND LOAD CALCULATION

Standard: The minimum service entrance for a dwelling (usage or load) **shall** be 100 amperes with a three wire, 120/240 volt, single-phase service with a grounded neutral. The nominal size wire used with 100 amp service **shall** be No. 4 copper or No. 2 aluminum; for a 200 amp service 2/0 copper or 4/0 aluminum wire is the nominal size.

4.3.2 SIZING OF SERVICE ENTRANCE CABLE

Standard: The service entrance cable **shall** have the same rating (amperage) as the meter base and the service equipment. Larger cable has lower resistance and will result in energy efficiency and **should** be considered when designing the service. If the service entrance is to be replaced, a calculation of usage or load within the unit **shall** be completed to assist in determining the appropriate size.

Commentary: For cable size and allowable amperage requirements, see the NEC Ampacity Table to determine the size of the service (which determines the entrance cable size). Sizing the service is based on the electrical needs within the home, the demand on the service, code requirements for individual circuits, as well as liberal planning for future expansion. These needs are determined by calculating usage or load, based on factors such as square footage of the unit, determining the number of circuits needed based on appliances present, and anticipation of future use. The utility will provide the correct meter base for the rating based on this calculation.

4.3.3 SIZING FOR AFTER-REHABILITATION CAPACITY AND LOAD CALCULATION

Standard: The service entrance **shall** be properly sized for after-rehabilitation capacity. Room by room specifications noting electrical outlets/fixtures **shall** accompany the specifications or deficiency list prepared for each unit inspected. OCD advises grantees to check the nameplate rating of all fastened-in-place small appliances such as; ranges, ovens, cooking units, clothes dryers and water heaters for actual VA rating. If the calculation falls at or near 100 amps, the service **should** be increased to the next common size available, such as 200 amps.

Commentary: The changes being made to the house during rehabilitation need to be considered when sizing the service entrance and the electrical system.

4.3.4 REQUIREMENTS FOR ALL-ELECTRIC HOMES

Standard: Homes equipped with all electric appliances such as: electric water heater, electric range, electric clothes dryer, central air conditioning, and electric heat **shall** be equipped with no less than a 200 amp service.

4.3.5 MAIN SERVICE PANEL/DISTRIBUTION CENTER

Standard: All service panels **shall** have a minimum rating of 100 amperes with circuit breaker type over-current protection. The panel **shall** be in proper working condition with no evidence of overheating, arcing, corrosion or failure. The panel **shall** bear the UL label and **shall** be marked as suitable for service equipment. Obsolete panels, such as Federal Pacific **shall** be replaced. Pushomatic panels **should** be replaced. Panels with evidence of malfunction or deterioration **shall** be replaced.

4.3.6 OVERCURRENT PROTECTION

Standard: The number of circuits installed **shall not** exceed the rating on the panel and the selection of a panel should permit room for future circuit expansion. Full size single pole or double pole breakers are recommended. Tandem breakers (half-size or mini-breakers) **shall** only be used in panels designed for such and installed per the NEC. The use of tandem breakers in order to exceed the 16 circuits permitted on a 100 amp panel **shall** not be permitted. All panel circuits **shall** be clearly, accurately, and permanently labeled with tags provided and all unused openings **shall** be properly plugged, capped or sealed with listed material. Panel board over-current devices **shall** be properly sized. All existing circuits **should** be load tested for tripping. Service equipment containing fuse over-current protection devices **shall** be replaced with properly rated circuit breaker type over-current protection devices.

Commentary: Proper sizing of the circuit breaker is critical because the amperage rating of a circuit depends on the rating of the breaker protecting the wire, not the wire size in the circuit. If not properly rated the circuit may never trip even when wires overheat and many potential hazards may go undetected until too late.

4.3.7 SERVICE PANEL ATTACHMENT AND CONNECTIONS

Standard: All existing or new service panels **shall** be securely fastened to the dwelling. All panel boxes **shall** be enclosed in 16 gauge or code sheet steel cabinets with doors and catches. Conductors entering the service **shall** have proper connectors and **shall** be securely and neatly attached at terminals. The wires **shall** be properly connected to terminals with no obvious nicks in the insulation and **shall** be properly bonded. Service panels **shall** not be located in bathrooms or closets. Proper installation **shall** include following the manufacturer's installation instructions or other instructions as required by the NEC. The design and location of the service panel **should** be considered when replacement is necessary.

Commentary: A safe and secure service panel, with firmly secured conductors and labeled circuits is very important for the safety and convenience of the occupant. Locating the panel near the meter may eliminate the need for an additional disconnect as well as reduce the amount of service entrance cable needed. A good panel is designed with enough work space to connect wires to the hot buses and neutral/grounding buses without creating a bird's nest of wires.

4.3.8 SUB-PANELS (ADD-ONS)

Standard: Sub-panels, add-on boxes or disconnects to existing services for additional circuits, **shall** be allowed only if the existing service equipment is listed and designed for such extension and the installation is in compliance with the NEC.

Commentary: Sometimes known as sub-panels, these boxes are added-on to the existing panel rather than replacing the existing panel and installing a new and higher rated panel. For example, an add-on panel may be considered when an existing service panel has adequate capacity but no available expansion slots.

4.3.9 SERVICE DISCONNECT

Standard: Each occupant **shall** have ready access to the disconnect serving the dwelling unit in which they reside. The service disconnect **shall** be clearly marked as a service disconnect and **shall** be installed at a readily accessible location either outside the building or inside at the nearest point of entrance of the service conductors. Service equipment containing only one main breaker **should** be used when altering the electrical service equipment.

Commentary: The main disconnect in the panel most often serves as the service disconnect. However, where it is not practical to place the service panel close to the meter and the point of entry for the service cable, then the NEC may require an additional, separate, disconnect at this entrance point.

4.4 BRANCH CIRCUITS

4.4.1 DEDICATED CIRCUITS

Standard: No less than one dedicated 20 amp circuit **shall** be present for each bathroom, and no less than two 20 amp small appliance branch circuits serving the kitchen. A dedicated circuit shall serve no other outlets.

In addition to the required branch and small appliance circuits, the individual appliances listed below draw enough current to warrant an individual dedicated circuit. When planning the scope of electrical rehabilitation work to be undertaken, serious consideration **should** be given to the capacity of the circuits and load demand. The number of small appliances used by the occupants, such as hair dryers, curling irons, portable heaters, coffee makers, toasters, etc. **should** be taken into consideration when planning the circuit loads and placement of the outlets to avoid overloading the circuit and to eliminate the use of extension cords or multiplex outlets (additional circuits are permitted).

All nominal 240 volt appliances or equipment, except individual baseboard heating units, **shall** be on separate circuits. Each 240 volt circuit **shall** be sized per the manufacturer's instructions and the NEC, to match the needs of the appliance for which it is intended.

Dedicated circuits for the following appliances **shall** be provided. The circuits for these appliances **shall** be sized per the manufacturer's instructions and the NEC. This will minimize the hazards of overloaded circuits, increase efficiency, and ensure future capacity for installation of additional convenience outlets:

Refrigerators
Freezers
Electric Range
Washing machine
Clothes dryer
Electric Water heater
Garbage disposal
Furnace
Microwave oven
Air conditioner
Dishwasher
Water well and sump pumps
Septic aerators
Other major electricity consuming appliances

4.4.2 CIRCUIT LOAD DISTRIBUTION

Standard: All circuit wiring **shall** be properly sized to serve the load. The loads **shall** be divided among various circuits to attain a close balance of probable or calculated load.

Commentary: Balancing circuits as well as the load reduces the strain on the electric system. A good way to lower energy costs, reduce strain on the system and reduce voltage drop, is to exceed code requirements by using bigger wire (e.g. use of No.12 wire with 20 amp circuits though code permits use of No. 14 wire with a 15 amp circuit) so that equipment and appliances operate nearer to the rated voltage. Remember that the farther a wire is run, the greater the voltage drop which causes power loss and wastes electricity.

4.5 PREMISES WIRING

4.5.1 GENERAL REQUIREMENT REGARDING 3-WIRE SYSTEM

Standard: All 2-wire, ungrounded wiring **should** be replaced with 3-wire, grounded wiring, as required by the NEC.

Commentary: Wiring, like most everything else, has a useful life span. As wiring ages, the insulation becomes brittle, and may become cracked, worn, or frayed. It also loses some of its effectiveness. Existing conductors and connections may also become corroded or loose over time. In addition, episodes of overheating over its lifetime may have further deteriorated the wiring. Therefore, old wiring does not have the capacity that it had when new, and may be unsafe.

Electrical demands have also increased over time. When many of the houses that we work on were originally wired, many of the electrical appliances, computers, electronics, etc. that we currently use were not even yet invented. This has placed an additional demand on the old wiring.

Finally, because these old two wire systems are ungrounded they pose an added hazard to the occupants of the home. This is particularly an issue in wet locations such as kitchens and bathrooms, but can be a problem anywhere. In addition, as homes are rehabbed, we are often changing the dynamics of the home. For example, we may be adding insulation which can cause additional overheating of the old wiring. These changes can also make rewiring the house at a future date more difficult. For all of these reasons, replacement of old two-wire systems is a good investment. The only reason that OCD does not require it in every case is because the costs can be substantial and may lead to additional walk-aways. However, OCD strongly encourages full replacement of old, outdated two-wire systems whenever possible.

4.5.2 UNUSED SWITCHES, RECEPTACLES, FIXTURES AND CONDUCTORS

Standard: All unused switches, receptacles, fixtures and conductors **shall** be removed, where accessible.

Commentary: Switches or receptacles which do not provide power must be removed so that there is no confusion about whether they are malfunctioning.

4.5.3 UNUSED OPENINGS

Standard**:** Any unused openings in outlet, device, pull and junction boxes, conduit bodies and fittings, raceways, cabinets, auxiliary gutters, equipment cases or housings **shall** be effectively closed with knockout seals.

Commentary: Openings left in boxes may allow for rodents, building materials, etc., to come into contact with wire connections and cause shorts. In addition, they present a safety hazard in locations where they are accessible for people to stick their fingers (or other conductive probes) into the openings.

4.5.4 WIRE SPLICES

Standard: All wire splices **shall** be placed in accessible, approved junction boxes which are properly covered.

Commentary: Accessibility means that it can be reasonably reached without altering the structure. For example, an attic with plenty of crawl room would be considered accessible.

4.5.5 KNOB AND TUBE WIRING

Standard: All knob-and-tube wiring located in open cavities (e.g. open joist attics, basements) **shall** be replaced.

Commentary: OCD recommends removing all knob-and-tube wiring (KTW) and installing grounded conductors which enable installation of grounded receptacles. Another option is disabling the KTW within the wall cavity and fishing THW wire for installation of a grounded receptacle.

4.5.6 CONSTRUCTION PROTECTION

Standard: Protection against physical damage of exposed electrical equipment **shall** be provided during and after construction.

4.6 RECEPTACLES

4.6.1 REPLACEMENT AND INSTALLATION

Standard: All replacement receptacles **shall** be listed or labeled by a qualified electrical products testing lab and installed per the manufacturer's instruction. All boxes **shall** be specifically designed for the purpose, properly sized, mechanically secure and have attached cover plates installed. Receptacles located in damp or wet areas **shall** be weatherproof and the wiring **shall** be run in boxes, conduit and fittings listed for wet locations.

4.6.2 REPLACEMENT OF EXISTING RECEPTACLES

Standard: All existing non-grounding type receptacles where a grounding means does not exist in the receptacle enclosure **shall** be replaced with new non-grounding type receptacles (the new receptacles are designed with the wider slot for polarity which limits the way that the cords are plugged in and helps to protect people from shock hazards), or with a ground fault circuit interrupter (GFCI) type receptacle, which **shall** be marked "no equipment ground", and may supply other grounding type receptacles on the circuit, which **shall** be marked "no equipment ground" and GFCI protected".

The other, and better option is to replace the wiring with a grounded, 3-wire system, and new, grounding type receptacles, or, if appropriate, GFCI protected receptacles, **shall** be installed. Grounded receptacles **shall not** be used with 2-wire, ungrounded circuits. All portions of the electrical system, including wiring, boxes, and receptacles **shall** be attached in a firm and tidy manner for both safety and aesthetic reasons.

When installing new wiring or replacing existing wiring with a new 3-wire system, the 2008 National Electrical Code requirements **shall** be met for tamper resistant receptacles and arc fault breakers. All new 3-wire systems **shall** require all general purpose receptacles to be replaced with tamper resistant receptacles and arc fault breakers to be installed in all rooms of the house, with the exception of laundries, kitchens, bathrooms, garages, and unfinished basements.

Commentary: If existing electrical receptacles are in a good and safe condition, replacement may be unnecessary. NEC Article 370-16 provides the requirements for determining the minimum size of box necessary for the number of conductors to be contained in it, so when adding conductors to existing boxes there is adequate space for the additional wires.

4.6.3 FLOOR RECEPTACLES

Standard: All receptacles located in the floor **shall** be either installed in an approved box listed and labeled for such use or **shall** be moved to the wall. Metal plates, or another safe method or material **shall** be used to cover the floor opening.

Commentary: Receptacles located in the floor are potential hazards and therefore need to be grounded and placed in approved and appropriately grounded floor mounted boxes or, where feasible, re-located to an adjacent wall.

4.6.4 RECEPTACLES ABOVE BASEBOARD HEATERS

Standard: Receptacles **shall** not be installed above electric baseboard heaters, unless provided for by an exception noted in the NEC.

Commentary: Baseboard heaters get hot and having receptacles above them creates a fire hazard where cords might drape over the heater.

4.6.5 RECEPTACLE LOCATION in HABITABLE SPACES

Standard: All habitable spaces, occupiable spaces, laundry rooms and basements **shall** have receptacles. In each family room, dining room, living room, parlor, library, den, sun room, bedroom, recreation room, or similar room or area, receptacle outlets **shall** be installed so that, at a minimum, each wall has at least one receptacle; or in habitable spaces (i.e. bedrooms, living rooms, parlors, dining rooms and similarly used rooms), receptacles are spaced so that no point along the perimeter of the floor is more than 6 feet from a receptacle. Wherever practical, receptacle outlets **should** be spaced equal distances apart.

Exception: Where rooms are not regularly used by the occupants, the minimum number of receptacles per room as described above does not apply. In this case, the minimum number of receptacles per room **shall** be one (1).

Commentary: An adequate number of receptacles is critical for convenience and can be an important safety factor by eliminating the use of extension cords to power the various appliances found in today's homes. OCD expects dwellings to have an adequate number of receptacles so that extension cords and multi-plug adapters are not required on a permanent basis. This is especially important in rooms which are used frequently. In some cases, such as homes occupied by a single elderly person, that is unable to climb the stairs to the upstairs bedrooms, this requirement may be less critical. In these cases, where the additional cost will make the project too expensive to complete, it may make sense to leave these rooms with less than the desired number of receptacles, but even in these cases, consideration should be given to future occupants in making the final determination.

4.6.6 RECEPTACLE LOCATION IN BATHROOMS

Standard: The bathroom **shall** be required to have at least one dedicated 20 amp receptacle outlet, which **shall** be GFCI protected, and **shall** be located within 3 feet of the outside edge of each basin. The receptacle **shall** be located on a wall or partition that is adjacent to the basin or basin countertop, or on the side or face of the basin countertop, not more than 12 inches below the countertop. The receptacle **shall** be located at least 30 inches and not more than 48 inches above the floor. Receptacles **shall not** be located within or directly over a bathtub or shower stall, and **shall** be at least 12 inches from the outer rim of any bathtub or shower opening.

4.6.7 RECEPTACLE LOCATION IN KITCHENS

Standard: The kitchen **shall** have the equivalent of two GFCI protected duplex receptacles, on two separate 20 amp appliance circuits, at the kitchen counter top space, as a minimum. Kitchens **should** have GFCI protected receptacles installed at each wall counter space every 48 inches, so that no point along the counter line is more than 24 inches from a receptacle outlet. The kitchen **shall** also be provided with a non-GFCI protected receptacle for the refrigerator which **should** be located directly behind the refrigerator.

Commentary: GFCI receptacles provide additional shock protection in areas such as kitchens where the risk of electrical shock are increased due to the presence of moisture.

4.6.8 EXTERIOR RECEPTACLES

Standard: Exterior outlets **shall** be GFCI weather protected. OCD recommends that each dwelling **should** have two weather protected GFCI receptacles installed, one located at the front and one located at the rear of the unit for convenience and safety, particularly if the occupants use power tools outside or decorate with exterior lights.

Commentary: The improper use of extension cords which are not rated for wet locations is a hazard. When the electric system is replaced or altered, the installation of exterior receptacles would not significantly increase the project cost. However, it would greatly increase the convenience to and safety of the occupants, so it needs to be considered.

4.6.9 AMPERE RATINGS OF RECEPTACLES

Standard: Receptacles installed on a branch circuit **shall** have the same ampere rating as the branch circuit itself. All newly installed (3-wire grounded system) 15 amp and 20 amp 120 volt receptacles **shall** be of the grounding type as required by the NEC.

To ensure safe operation of the over-current protection system, all receptacle amperage **shall** match the requirements of the applicable NEC Table. For example, a 15 amp circuit **shall not** have receptacles with greater than a 15 amp rating.

4.7 GFCI PROTECTION

Standard: Receptacles located within 6 feet of a sink, located in a bathroom, at kitchen counter top space, in a garage, in an unfinished basement, or located outside **shall** be GFCI protected as required by the NEC.

Exception: Single-use, dedicated receptacles for use by equipment and appliances, such as washing machines and sump pumps, **shall not** be GFCI protected, and **shall** be single, rather than duplex receptacles, unless required by local code enforcement.

4.8 LIGHTING FIXTURES

4.8.1 MATERIALS AND INSTALLATION

Standard: All replacement fixtures **shall** be listed or labeled by a qualified electrical products testing lab and installed per the manufacturer's instructions. No fixture or socket **shall** hang from a base by unsupported wiring.

Commentary: If existing fixtures are in good and safe condition, securely and tidily attached, they may not have to be replaced. However, fixtures must be securely fastened to the framing members by mechanical means, such as bolts, screws, rivets or approved clips.

4.8.2 FIXTURE AND SWITCH LOCATION

4.8.2.1

Standard: **General requirements:** A permanently installed lighting fixture controlled by a wall switch **shall** be required to be located in each bathroom, kitchen, laundry room, furnace room, basement, at all exterior doors, common hallways, common stairways, and attached and detached garages with existing electric power. In other habitable rooms including living rooms and bedrooms, permanent lighting fixtures which are wall switch controlled, or wall switch controlled receptacle outlets **shall** be installed. Care **should** be taken when replacing existing fixtures not to overload existing wiring. Also see RRS 6.2.1.

Commentary: Prior to 1984, wire installed in homes was rated for 60° C; many present design incandescent fixtures are marked as requiring 75°C or 90° C supply conductors. Therefore, if not replacing the wiring, care must be taken in the selection of a replacement fixture.

4.8.2.2

Standard: **Switch location:** Switches **shall not** be installed in tub or shower areas. New switches **shall not** be located behind the door swing. All new wall switches **shall** be located for convenient and readily accessible use.

Commentary: Proper lighting is a matter of safety and convenience. As a particular safety concern, locations where people may come into contact with water and electricity are especially hazardous and should be avoided.

4.8.2.3

Standard: All light fixtures installed in closets **shall** be surface mounted or recessed incandescent with all lamps completely enclosed, or a surface mounted or recessed fluorescent fixture with enclosed lamps and **shall** be installed on the wall 6 inches away from any storage as required by the NEC.

Commentary: Due to the potential fire hazard in a closet, where flammable materials may come into contact with a hot light bulb, the removal or replacement of existing closet light fixtures to meet this standard must be done. Open incandescent lamps (bulbs) cannot be replaced with open compact fluorescent lamps.

4.8.3 FIXTURE SELECTION ENERGY CONSIDERATIONS

Standard: Fixtures and lamps (bulbs) installed in areas lighted for long periods (e.g. several hours per day) **should** be selected for energy efficiency. For example, fixtures that accommodate compact fluorescent lamps (CFL) **should** be considered for kitchens, hallways and stairways. Also, CFL fixtures that are photo-cell controlled **should** be considered for outside porch and door lighting.

Commentary: When a CFL fixture is installed, a lamp must be provided and the occupant must be educated about the long term cost saving benefits of energy efficient fixtures. For additional information on electric lighting standards, see RRS Section 6.2.1 and RRS Appendix F.

4.9 SMOKE DETECTORS

Standard: Each dwelling **shall** have approved smoke detectors, installed in accordance with the manufacturer's instructions, located as described in the RRS 6.6.3. Smoke detectors **shall** draw their primary power from the building wiring, with battery backup, and without interruption except for that required for over-current protection. Power **shall** be 120 volts. The wiring **shall** be interconnected, so that all detectors sound the alarm when any one senses smoke.

Commentary: Smoke detectors must be approved, listed, installed in accordance with the manufacturer's instructions and placed so that adequate warning is audible in each bedroom. Choose a circuit used often such as a bathroom light so that if the circuit fails it is noticed immediately. Education of the occupants about the proper operation and maintenance of smoke detectors is necessary. Occupants that do not understand these concepts may seek to disconnect the equipment because of "false alarms" or frequent "chirping". Smoke detectors require frequent cleaning to keep them free of dust and other contaminants and the batteries must be changed frequently in compliance with the manufacturer's instructions (typically every six months). OCD also recommends placement away from showers and kitchens, if possible. These considerations will help to alleviate much of the frustration of occupants with these devices, and will help the detectors to operate as designed.

CHAPTER FIVE

PLUMBING

GENERAL REQUIREMENTS

The plumbing system must provide for a safe, adequate supply of potable water to the premises and provide for a safe, sanitary method of disposing of liquid and solid wastes. To be effective, the following basic plumbing principals need to be followed:

- Fumes from sewer gases can be toxic, and must not be allowed to enter the building air supply;
- Sewer leaks must be identified and repaired, and improper disposal methods must be discontinued (sewer leaks and/or improper disposal of sewage can create unsanitary conditions, lead to deterioration of other building components, and can create environmental hazards);
- Water must be free from hazardous contaminants, and safe for drinking, bathing, and other uses. The water must also not be overly corrosive to the piping material and fixtures;
- An adequate supply of water must be available for all drinking, bathing, toilets, laundry, and cleaning tasks (this will require adequate pressure at each outlet); and
- Water leaks into buildings must be corrected. They can create hazardous indoor air quality conditions, and can lead to an environment favorable to mold, mildew, and other contaminants. Water leaks can also lead to severe deterioration of building components, and the source of moisture can encourage termites and other unwelcome pests. These conditions should be corrected.

The plumbing system includes water supply lines; drain, waste, and vent pipes; plumbing fixtures such as faucets, hot water heaters, sinks, lavatories, toilets, bathtubs, showers and any devices which are permanently or temporarily connected to the water distribution system of the premises and demand a supply of water or discharge waste water, liquid-borne waste materials or sewage either directly or indirectly to the drainage system of the premises, or which require either a water supply connection or a connection to the drainage system of the premises. All piping, fittings, devices, faucets, vessels, containers and receptacles that are used to supply, distribute, receive or transport potable water or liquid or solid wastes are considered as plumbing.

5.1 INSPECTION AND REPAIR REQUIREMENTS

5.1.1 REPLACEMENT OR REPAIR OF PLUMBING SYSTEM

Standard: When a plumbing system is replaced or partially replaced, the system used for the replacement portion **shall** be designed, constructed and installed in conformity with the Ohio Plumbing Code (OPC) using accepted engineering practice and workmanship.

Commentary: Older houses may make use of materials and methods which differ in certain ways from those in common use today. Yet current methods of good workmanship and new standards must apply to any new work that is being done. (It may be permissible, for example, to leave galvanized piping as supply piping in a house if it is in good shape and is functioning well. However, when replacing supply lines, copper is a better choice). You should consider reviewing your plumbing plan with your local plumbing inspector before starting work. Also remember that OPC and most other codes are minimum standards and many good plumbing installations will exceed these standards in design, workmanship and selection of materials. Another consideration when dealing with supply lines and fixtures is their lead content. Lead is a safety hazard and OCD requires the use of lead-free solder, piping, fittings and fixtures.

5.1.2 STRUCTURAL INTEGRITY

Standard: Supply, drain, waste, and vent lines **shall not** run through structural members in such a way that will interfere with their ability to sustain the imposed loads. Drilling and notching of structural members **shall** conform to the OPC.

5.1.3 INSPECTION GUIDELINES

Standard: Prior to choosing a contractor to undertake rehabilitation and as a part of the process of determining the extent of rehabilitation work, a thorough inspection **shall** be done to determine the scope of the plumbing that is not in compliance with the RRS. All parts of the plumbing system **shall** be inspected to ascertain whether they are functioning properly and adequately, are free of leaks and are otherwise following the guidelines set out in the RRS and the Ohio Plumbing Code. When problems are found, other tests will need to be done (for example, if a faucet appears to have low pressure, pressure tests and/or supply line calculations **shall** be done to determine the extent and cause of the problem). Plumbing inspections and all plumbing work **shall** be done by qualified people who are experienced in working on plumbing systems and knowledgeable in the field. Clear and detailed work specifications **shall** be written for all work to be completed and given to contractors prior to submission of bids. For other required plumbing inspections, refer to the RRS, 5.2.1, and 5.4.1. All newly installed plumbing work **shall** be inspected and tested according to procedures identified in the OPC.

5.2 WATER SUPPLY

5.2.1 WATER SOURCE

Standard: All water service entry lines **shall** be properly connected to either a public water supply system or an approved private water supply system in conformity with the OPC. When connected to a private system, an analysis of water by the local health department, or other qualified entity, **shall** be done to determine the bacterial content for safety and, when necessary, appropriate corrective measures **shall** be implemented. Newly installed water supply lines **shall** be flushed out in conformance with the OPC.

5.2.2 WATER QUALITY

Standard: Supply systems **shall** provide for the delivery of potable water through a safe system of piping, free from leaks and defects and not subject to the hazards of backflow. The water **should** be free of pathogenic organisms; free of toxic chemicals; relatively free of odor, taste, color, and turbidity; free of excessive minerals; and relatively non-corrosive. In the event that water quality is sub-standard, corrective measures to improve water quality such as water filtering, softening and/or conditioning equipment **should** be installed, as needed.

Commentary: In some cases, it could be necessary for further tests to be completed by a lab to determine the presence of toxic chemicals, mineral levels, etc. See also the RRS Section 6.7.3. Well water is often acidic or corrosive and piping systems for wells could need replaced more quickly than if they were on a public water system.

5.2.3 FROST PROTECTION

5.2.3.1

Standard: **Pipe Protection:** All newly installed exterior water lines **shall** be buried a minimum of 6 inches below the local frost line as established by the local building code (a minimum of 4 feet below grade for jurisdictions with no local building authority established frost line) and comply with all of the OPC requirements on trenching, excavation, and backfill. All existing water lines **should** enter and exit the building 6 inches below local frost depth and **shall** not be exposed to the outside. All interior water distribution lines in unheated areas or in exterior walls **shall** be moved to heated areas or insulated to prevent freezing as required.

Commentary: Ohio's climate could allow pipes and other water distribution equipment to freeze if left exposed to the elements. Proper precautions must be taken to avoid potential frozen pipe damage.

5.2.3.2

Standard: **Hose bib protection:** All hose bibs (water faucets) in unheated or exterior locations **should** be frost proof and anti-siphon and designed so that they extend into a heated area through the building insulation and the water line to the hose bib **should** be equipped with an accessible shut-off valve located within a heated area. Where no exterior hose bib exists, one **should** be installed if the occupants need it. All newly installed hose bibs **shall** be frost proof and anti-siphon and designed so that they extend into a heated area through the building insulation and the water line to the hose bib **shall** be equipped with an accessible shut-off valve located within a heated area.

Commentary: The vacuum breaker or anti-siphon valve prevents siphonage or back flow when an air gap is not continually in existence. An example of a problem that might occur would be if you had a hose attached to your faucet and laid the other end in a puddle of antifreeze or oil from your car or even in a mud puddle with a high

bacteria count. There would be potential for the hose to siphon the contaminants out of the puddle and into your water supply system. Air gaps and vacuum breakers are designed to prevent this. Be aware that this possibility can exist at other places where no air gaps exist such as laundry tubs or sinks with hoses.

Also be aware that freezing of hose bibs can cause water pipes to burst, and that, even though the hose bib has been in its present location for many years that rehabilitation of the house may have changed the environment of the house through air sealing or insulation in a way that would make the pipes more likely to freeze, or a particularly cold winter may create the conditions necessary for pipe damage to occur. Many households may not have the funds to make the needed repairs, and be forced to choose to go without water. For these reasons, OCD recommends that all existing hose bibs be upgraded to the anti-siphon, frost proof type.

5.2.4 QUANTITY AND PRESSURE

5.2.4.1

Standard: **Building entrance**: The minimum average static pressure at the building entrance **should** be between 40-80 psi for either private or public water service and meet the requirements of the OPC. If pressure exceeds 80 psi, an approved pressure reducing valve **shall** be installed. This will help to prevent fixtures from becoming ruined due to high pressure. If pressure is less than 40 psi then the system **shall** be evaluated to determine reasons for low pressure and corrective measures **should** be taken.

Commentary: Inadequate water pressure can make life difficult for the occupants. They may find it difficult or impossible to conduct routine tasks such as laundry or bathing. Pressure loss to a house on a public system can be caused by inadequate supply for the demand, inadequate piping size, inadequate tank height for the property, etc. Pressure loss to a house on a private well can be the result of an improperly pressurized tank, an improperly working tank bladder, problems with the pump, inadequate water supply, etc. These problems are often exacerbated by corroded or inadequately sized supply lines within the building. RRS Appendix 5-A provides a methodology for properly sizing supply lines (or checking to see that they are of adequate size). Efforts need to be made to determine the reasons for the inadequate pressure and appropriate measures taken to remedy the problem.

5.2.4.2

Standard: **Supply lines and fixtures:** Supply lines and fixtures **shall** be capable of performing the function for which they are designated. Interior water distribution lines **shall,** at all times, supply water to the plumbing fixtures in sufficient volume and at a pressure adequate to enable them to function satisfactorily. New water supply lines **shall** be sized and installed according to accepted engineering practice (see the RRS Appendix 5-A or the OPC, for supply piping size guidelines). All openings in floors, walls, ceilings, cabinets, etc. around supply lines **shall** be sealed in conformance with the OPC.

Commentary: Water volume and pressure can change over time as pipes, fittings, and fixtures corrode and become constricted. Also the design of the system, the amount of water pressure and volume supplied by the main line coming into the building, and other factors affect the pressure at each fixture. See the RRS Appendix 5-A, Table 5-A.1 or the OPC for recommended pressures for satisfactory functioning of fixtures.

5.2.5 VALVES

5.2.5.1

Standard: **Service valve:** All main water lines **shall** have an accessible service shut-off valve located near the entrance of the water service into the house that meets the requirements of the OPC. This valve **shall not** be of a type that will restrict the flow of water when fully open (port open). Existing valves **shall** be tested to ensure that they function properly and do not leak.

Commentary: A main service shut-off valve is necessary to provide for shutting off water in case of an emergency or a leak in the system. It must be located inside the building in a convenient location as close as reasonably possible to where the water supply line enters the house to prevent leaks from occurring in the line ahead of the valve. If the supply entrance to the building is not in a convenient location, a second valve might need to be installed at the first easily accessible location to ensure that the water can be quickly shut off.

5.2.5.2

Standard: **Fixture and shut-off valves:** All hot and cold water supply lines feeding sinks, lavatories, bathtubs, showers, toilets, water heaters and other plumbing fixtures **shall** be equipped with functional and accessible shut-off valves. For tubs and showers, the shut-off valves may be located in a basement in close proximity to where the waterlines feed the tub or in an access panel in the wall directly behind where the faucet controls are located.

Commentary: Valves at each fixture make it possible for occupants to turn off the water to an individual fixture quickly and without turning off all water in the event of problems with a fixture, which may prevent flooding and deterioration of housing components. It also makes the changing of fixtures an easier, less expensive task.

5.2.6 AIR GAPS

Standard: There **shall** be a 1 inch minimum vertical air gap between the flood rim of a fixture and the lowest end of a water supply outlet in conformity with the OPC.

Commentary: Air gaps are necessary to prevent contamination of the water supply by back flow or siphonage of wastewater or other contaminants.

5.2.7 SUPPORT OF PIPING

Standard: All supply lines **shall** be properly supported to prevent sagging and/or breakage, and **shall** meet the requirements of the OPC. Attention **should** be given also to noise reduction through proper support, insulation, and design techniques. New piping **shall** be installed in a neat and efficient manner. Existing supply lines that are a mixture of various materials, are inefficiently run, and/or are showing signs of deterioration **shall** be closely inspected, and where the system is in poor condition so that the potential for leaks is likely, then the supply lines **should** be replaced.

5.2.8 JOINTS BETWEEN DISSIMILAR METALS

All joints between dissimilar metal pipes **shall** be made with dielectric fittings in conformity with the OPC. Dielectric fittings help to prevent joint deterioration due to electrolysis. Plumbing system components **shall** be carefully inspected to determine the extent of corrosion and the integrity of joints, fittings, and other system components. Where defects are found, corrective action **shall** be taken. An example of a common location for dielectric fittings would be where copper supply lines attach to a hot water heater.

5.3 PLUMBING FIXTURES

5.3.1 GENERAL REQUIREMENTS

Standard: All plumbing fixtures **shall** be made of materials that are impervious to water, easily cleanable, and **shall** not have leaks or defects which interfere with their function and **shall** meet the requirements of the OPC. While fixtures need not be new to be adequate, they **shall** be in good usable condition. All new fixtures **shall** be installed using good workmanship. Care **shall** be taken to adequately seal or caulk carefully wherever appropriate to provide protection from water damage.

Commentary: Plumbing fixtures include water closets (toilets), urinals, bidets, faucets, lavatories, sinks, showers, bathtubs, floor drains and drinking fountains, and a separate class of plumbing fixtures known as plumbing appliances including washing machines, dishwashers, water heaters, garbage disposals, water softeners, water purifiers and hot water dispensers.

5.3.2 CONSTRUCTION AND INSTALLATION OF FIXTURES

Standard: Fixtures shall conform to the following guidelines in terms of how they are constructed and installed:

a. All replacement plumbing fixtures **shall** comply with the ASSE/ANSI standards listed in reference to the RCO and the OPC, plumbing fixtures.

b. All replacement water closets **shall** be water conserving low consumption (not to exceed 1.6 gallons per flush) and **shall** conform to the OPC.

c. All replacement sink faucets **shall** be that of a water conserving type which delivers a maximum flow rate of 2.2 g.p.m. at 60 psi, and in compliance with the OPC.

d. All replacement bathtub and shower fixtures **shall** use anti-scald control valves. The control valves of the pressure balancing, thermo-static mixing or the combination pressure balancing/ thermostatic mixing valve types **shall** be controlled and designed to limit water temperature change to a maximum setting of 120°F in compliance with the OPC. Access panels **should** be provided to these valves.

e. All fixtures **shall** be rigidly supported and securely attached in a manner consistent with normal installation procedures, installed level, and conform to the OPC.

f. All faucets **shall** have the hot water connected to the left side of the faucet being installed according to the OPC. Existing supply lines that are reversed **shall** be changed.

g. All trap sizes **shall** not be less than 1 ½ inches inside diameter (i.d.) for showers, kitchen sinks, dishwashers, laundry tubs, and bathtubs; not less than 1 1/4 inches i.d. for lavatories and not less than 2" i.d. for washing machines in compliance with the OPC.

h. All plumbing fixtures other than toilets **shall** be provided with approved strainers in conformity with the OPC.

i. If a garbage disposal is present, it **should** be in good working order. If not It **should** be removed, repaired or replaced.

j. Water softener equipment, if present, **shall** be in operable condition and free from leaks or possible contamination through back flow of sewer or other sources and **shall** be properly discharged. If not, it **shall** be removed, repaired or replaced. New equipment **shall** be installed in accordance with the manufacturers' instructions.

k. All plumbing fixtures and plumbing appliances **shall** be free of leaks or **shall** be repaired or removed. It is the responsibility of the owner to maintain their appliances in working order.

l. Water heaters **shall** be in good functional condition and properly installed per the RRS Section 3.8. For pan requirements refer to the OPC or local code authorities.

Commentary: Conserving water is in the best financial interests of the occupants over the long term as well as in the interest of the environment. Therefore, OCD encourages the use of water and energy conserving fixtures and equipment whenever it is

practical.

5.4 SANITARY DRAINAGE

5.4.1 CONNECTION TO AN APPROVED SEWAGE SYSTEM

Standard: All fixtures **shall** be connected to an approved sewage disposal system in compliance with the OPC. All private septic systems **shall** be tested to ensure that they are properly and adequately functioning. If problems are found, they **shall** be corrected. New sewage disposal systems **shall** comply with EPA requirements and local health department regulations.

Commentary: The sanitary drainage system consists of the pipes designed to provide adequate circulation of air, exhaust of foul odors, prevent loss of water seals in the traps and assist with the flow of wastes out of the building into an approved sewage disposal system. Unapproved private systems would include pit privies, cesspools, ponds, lakes, streams and rivers. See also RRS Section 6.7.5.

5.4.2 INSTALLATION DETAILS

Standard: Building drainage systems **shall** be properly installed, connected, and maintained in working order, free flowing, and free from leakage of water or sewer gases. Some of the causes of leakage are corrosion, poorly made connections, defective materials, settling or moving of the ground, temperature changes, and freezing. Sizing of new drainage systems **shall** be accomplished using the OPC. The OPC **should** be used to determine the adequacy of the existing system. Where deficiencies are found, the size or design of the existing system **should** be altered in conformance with the OPC. Existing plumbing that has a mixture of a variety of different types of piping or fittings or that is run in an inefficient manner **should** be replaced.

Waterways **should** also have smooth interiors and **should** conform to the applicable OPC table for pipe slope requirements. All new installations of drainage systems, portions of systems, and/or repairs **shall** meet all applicable OPC codes and all preexisting drainage systems **shall** conform to the following:

a. All drainage system repairs or replacements **shall** be done with approved fittings that conform to the pipe being used in conformity with the applicable OPC section, and provide for a smooth drainage flow.

b. All drainage systems **shall** provide a free flowing waterway and maintain a continuous and appropriate slope.

c. All plastic DWV (drain/waste/vent) pipes **shall** be ABS or PVC - DWV Schedule No.40 and **shall** comply with the applicable OPC Section. All waste stacks **shall** be provided with an accessible clean out located on the stack closest to where the waste pipe exits the house.

5.4.3 TRAPS

Standard: All fixtures **shall** be trapped and all traps **shall** conform to the following specifications:

a. Unless noted as an exception in the OPC, all waste outlets **shall** be separately trapped by a water seal trap as near to the fixture as possible, but in no case more than 24 inches from the fixture.

b. All traps **shall** be set level with respect to their water seals and **shall** be protected from frost and freezing weather.

c. All plumbing fixtures **shall** be trapped with a water seal not less than 2 inches or more than 4 inches and **shall** meet the requirements of the OPC.

d. Traps **shall** be of standard design and self-cleaning. Bell traps, "S" traps and Drum traps are prohibited as noted in OPC.

e**.** Fixture trap size **shall** be sufficient to drain the fixture rapidly and in no case less than 1 1/4 inches i.d. for lavatories; 1 1/2inches i.d. for tubs, showers, kitchen sinks, , and dishwashers; 2 inches i.d. for washers and floor drains; and **shall** be in conformity with the OPC.

f. No trap **shall** be larger than the drainage pipe into which it discharges as stated in the OPC.

g**.** Access panels **should** be provided for all fixtures with concealed connections.

h. Any recess provided for the connection of traps and all openings through walls and floors for traps and drainage system components **shall** be sealed to be insect and vermin proof.

Commentary: The purpose of traps is to prevent sewer gases from entering the house. This is accomplished by a water seal in the traps through which the sewer gases cannot pass.

5.4.4 VENTS

Standard: Plumbing systems **shall** be designed to prevent sewer gases from entering the house and to allow waste to adequately drain into an approved sewer system, **shall** be vented to the atmosphere so that water released from the fixture may draw in air to allow for a smooth and even drainage flow and **shall** not siphon the water from the traps, and **shall** conform to the following venting guidelines:

a**.** All plumbing systems **shall** have at least one main vent stack, running from the main building drain up through the building and terminating outdoors on the roof and sized in accordance with the applicable OPC

section for frost closure. If it is the only plumbing vent connected to the system, it **shall** be no less than 3 inches diameter inside from top to bottom.

b. All plumbing vent systems **shall** be used only for the purpose of venting the plumbing system.

c. Existing vent extensions through the roof **shall** terminate at least 6 inches above the high side of the roof penetration. All newly installed plumbing vents **shall** be a minimum of 12 inches above the roof penetration and in conformity with the OPC. All plumbing vent terminals through the roof **shall** be flashed water tight, and **should** be a minimum of 3 inches in diameter, in conformance with the OPC.

d. All vent pipes **shall** be installed so that they are sloping back to the waste pipe to allow for moisture and condensation to drain back to the main drain line. All vent pipes which terminate in the attic **shall** be extended through the roof or replaced. All vent pipe terminations **shall** be in conformance with the OPC, and **shall not** terminate near any windows or doors, under soffits, less than 10 feet above average grade level, or less than 10 feet from the lot line, and **shall** be protected from physical damage from vehicles.

e. All new installations of drainage systems or portions of systems **shall** be properly vented and meet all of the applicable requirements of the OPC. Existing plumbing systems **should** be vented in accordance with the OPC using the methods outlined in the OPC.

f. Air admittance valves are allowed provided they are the approved type, which is ASSE 1051. If there is any doubt about the type or age of the air admittance valves, they **shall** be replaced using the approved type. Some of the old types of air admittance valves develop leaks over time, which allow sewer gases to enter the structure. All air admittance valves **shall** be installed in conformance with the OPC.

CHAPTER SIX

ENVIRONMENT

GENERAL REQUIREMENTS

The concept of environment takes in everything that potentially affects the well-being of the occupants, the neighborhood, and the environment, and encompasses a lot of things not covered in the other chapters. Many of the items covered in this chapter are also tied to the other chapters. For example, indoor air quality is related to a discussion of windows (Chapter 2), proper operation of fuel burning appliances (Chapter 3), proper venting of sewer gases (Chapter 5), and the use of safe work practices (Chapter 7). The environment includes more than just the house, but also takes in the premises. Though many of the items that could be covered here are discussed in the other chapters because they are related to specific systems, this chapter attempts to also pick up areas that are important, but get lost because they do not fall well within one of the specific systems. In general, the chapter on environment is responsible for the following:

- Setting general living standards in regards to the general condition of the property with regards to critical needs such as light, fresh air, sanitation, moisture control, fire safety, safe water supply, and health hazards;
- Setting standards for occupancy limitations and requirements for habitable spaces;
- Sets standards for accessibility;
- Sets standards for other federal requirements such as historic preservation and floodplain management; and
- Outlines guidelines for dealing with accessory structures and other exterior work.

Note that the requirements associated with lead-based paint have been moved to Chapter 7. Following are specific guidelines associated with the environment.

6.1 PREMISES AND DWELLING CONDITION

6.1.1 PRIORITIZATION OF A SAFE SANITARY ENVIRONMENT

6.1.1.1

Standard: Inhabited Buildings: Each inhabited building **shall** provide a safe, sanitary and satisfactory environment for the occupant(s) and the neighborhood. The dwelling **shall** meet the requirements of the RCO.

6.1.1.2

Standard: The property on which each inhabited dwelling is located **should** provide a safe, sanitary and satisfactory environment for the occupant(s) and the neighborhood. The sub-standard premises conditions **should** be prioritized, with higher priority given to those that most directly affect the health and safety of the occupants and the structural integrity of the dwelling.

Commentary: Although rehabilitation must focus on correcting the dwelling's sub-standard conditions, the opportunity for eliminating the unsanitary, unsafe and unsightly conditions on the property surrounding the dwelling must not be overlooked. The condition of the property must be considered as part of a comprehensive approach to rehabilitation. Property left in poor condition can decrease the effectiveness of the rehabilitation work done to the home and reduce the impact of the rehabilitation on the neighborhood. For example, improper site drainage can continue to cause erosion and moisture damage to the home and excessive rubbish can continue to stifle neighborhood revitalization.

However, because rehabilitation funds are limited, OCD recognizes that all sub-standard premises conditions cannot be eliminated. Therefore, grantees must prioritize the correction of sub-standard premises conditions to those that most directly affect the health and safety of the occupants and the structural integrity of the dwelling. For example, a decayed tree leaning over the home would need to be removed while a deteriorated patch of the driveway may be ignored.

OCD encourages grantees to establish policies regarding owner responsibilities to remove blighted conditions prior to rehabilitation and to maintain the premises in a blight-free condition after rehabilitation. For example, depending upon the owner's ability, grantees may require owners to clear the property of accumulated rubbish, motor vehicles and other unsanitary or unsightly conditions prior to receiving financial assistance. Locally adopted Minimum Housing Standards or property maintenance codes could also apply.

6.1.2 <u>GARAGES AND OUTBUILDINGS</u>

6.1.2.1

Standard: **Existing unattached garages and outbuildings:** Unattached garages and outbuildings **should** be free of hazards to the occupant's health and safety. Existing conditions that are hazardous to the health and safety of occupants **should** be corrected. For example, existing electrical wiring, fixtures and receptacles that are hazardous **should** be repaired consistent with the RRS Chapter 4, electrical system requirements or the unsafe wiring **should** be removed and taken out of service. Home repair funds **shall not** be used to repair deficiencies on unattached garages and/or outbuildings unless the home repair is for lead work to the house and premises.

Commentary: Accessory structures cannot be rehabilitated to the same extent as dwellings. However, conditions that are hazardous to the health and safety of the occupants need to be corrected. Unattached garages which significantly detract from the overall appearance of the property or neighborhood may be repaired as a part of the rehabilitation, provided the repairs are minimal in cost and incidental to the rehabilitation of the dwelling.

If repairs to correct deteriorated structural conditions are done to an accessory structure as a part of the rehabilitation to a house, the repairs shall be minimal but sufficient to restore adequate structural integrity and appearance and stabilize structural deficiencies. With permission of the owner, demolition of the structure may also be an option for dealing with the hazards associated with an accessory building.

6.1.2.2

Standard: **New garages or outbuildings:** When constructing a house, and a need is identified for additional storage, a garage, or outbuilding **should** be constructed. All newly constructed garages and outbuildings **shall** meet all applicable requirements of the RCO, including the requirements of the other referenced codes.

6.1.3 DRAINAGE

Standard: The premises near the house **should** be free from large or deep depressions that routinely collect stagnant water, and free from improper grading or settling that causes erosion or the potential for infiltration of water into the house. All drainage problems **should** be addressed including proper grading; the addition of fill and topsoil, as needed; and proper seeding, as necessary, to prevent further erosion and to provide for a usable ground covering. Also see RRS 2.1.6, foundation perimeter drainage and moisture control. Surface drainage, **should** be diverted to a storm sewer conveyance or other approved point of collection to not create a hazard. New lots **shall** be graded to drain surface water away from foundation walls.

6.1.4 CISTERNS

Standard: Unused, in ground cisterns **shall** be evaluated for potential safety hazards, and **shall** be properly filled and covered as necessary to eliminate the potential safety hazard. Cisterns that are currently used **shall** be evaluated, considering the lifestyle of the client, and the potential hazards that they present, and appropriate measures taken. If they are to remain in use as the only viable and affordable source of drinking water, then the water **shall** be tested to ensure that it is safe (See the RRS, 5.2.1 and 5.2.2).

Commentary: Abandoned cisterns (cisterns no longer used as a source of household water) are a potential safety hazard to people, animals or structures. They are also a possible source of contamination to ground water. To eliminate safety and environmental concerns and minimize liability exposure, they must be properly filled. Often homes depended upon roof run-off collection and cistern storage for household water. Although many remain in place, they are often not required as a source of household water. The cistern may pose environmental and safety hazards in a manner similar to abandoned wells.

6.1.5 PAVED SURFACES

Standard: Sidewalks, driveways, patios and other paved surfaces on the premises **should** be free from hazards which can cause tripping and falling. Paved surfaces adjacent to the foundation **shall** not slope towards the structure so that water can potentially collect or drain towards the foundation. The repair of paved surfaces **shall** be minimal in cost and incidental to the rehabilitation of the dwelling. Paved surfaces that are deteriorated but do not present a hazard or a drainage problem **shall not** be repaired.

6.1.6 RETAINING WALLS AND FENCES

Standard: Walls required to retain earth around and adjoining the dwelling such as terraced grades near the structure or exterior sub grade basement entry ways and stairways **shall** be free of structural deficiencies which present an imminent hazard to the occupants and to the structural integrity of the structure. Retaining walls around and adjoining the dwelling which are bowed and/or leaning outward to the degree that failure and collapse in the immediate future is likely **shall** be repaired or replaced. Such walls which are not an immediate threat, but which will continue to deteriorate and eventually fail **should** be repaired to stabilize deficiencies. Repairs **should** be sufficient to stabilize the concern and eliminate the causes of the ongoing deterioration. Other walls and fences that pose a serious safety hazard to persons **shall** be repaired or removed. Fencing that is not necessary for specific safety reasons **shall not** be installed.

Commentary: Due to the potential for significant costs associated with this type of repair, OCD does not recommend the wholesale replacement of retaining walls, unless evaluation determines such action to be necessary. Instead, OCD suggests the repair or replacement of the affected areas of the wall. Similarly, repairs to deteriorated fencing are generally out of the scope of work associated with OCD programs. Only if there is a serious safety hazard requiring the need for repairs or replacement may this be considered.

6.1.7 RUBBISH AND GARBAGE

Standard: The premises and the dwelling **shall** be free from accumulations of rubbish and/or garbage that present health and safety hazards to the occupant or to the persons employed by the rehabilitation program. All such rubbish **should** be kept in covered containers for proper disposal. The owner **should** be informed of the need to maintain safe and sanitary premises.

Contractors **shall** clean the premises at the end of each work day of all construction debris; which **should** be piled in an agreed upon and nonhazardous location onsite, placed in appropriate containers for disposal, or removed from the site. Similarly all materials, tools, equipment, ladders and other items used by the contractors **shall** be stored in a safe and tidy manner or removed from the site at the end of each day.

Commentary: An excessive accumulation of rubbish and garbage is a clear health and safety problem. It is a problem not only for the occupant (and perhaps the neighborhood), but also for the rehabilitation program. Cluttered premises can make inspections and rehabilitation work more difficult and dangerous.

OCD recommends that accumulations of rubbish and garbage be removed from the exterior premises and from the interior of the dwelling prior to rehabilitation.

If the owner has the ability to remove the rubbish, grantees can require the removal of the accumulated rubbish as a condition for participation in the rehabilitation program.

6.1.8 EXTERMINATION OF VERMIN AND INSECTS

Standard: The premises **shall** be free from infestations of vermin and/or wood-boring insects. Inspections **shall** be performed on each existing house by qualified inspection and extermination contractors (or rehabilitation specialists trained and experienced in conducting wood boring insect infestation inspections), prior to rehabilitation. If there is evidence of an infestation, professional treatment **shall** be performed. Also, an analysis **shall** be done on the environmental factors that may be contributing to the infestation, and, as necessary, action **shall** be taken to mitigate these contributing factors. After extermination, proper precautions **should** be taken to prevent re-infestation. The owner **shall** be advised to continue services to prevent re-infestation.

Commentary: Untreated infestations can have serious and long term adverse effects on the rehabilitation investment in the home. Not only is the habitability of the home threatened, but, as is the case with wood-boring insects such as termites, the structural integrity of the home can also be at risk.

Examples of environmental factors that can contribute to infestation of vermin are accumulations of rubbish, unsanitary conditions, the presence of moisture, untreated wood in close proximity or in contact with soil, etc.

6.1.9 TREES, SHRUBS, AND LANDSCAPING

6.1.9.1

Standard: **Tree and shrub removal:** The premises **shall** be free from trees and shrubs that are damaging the dwelling, or present an on-site hazard. Tree limbs which are in danger of falling on roof areas **should** be removed.

Commentary: Trees or shrubs that are growing up against the dwelling or its foundation can cause considerable damage. Roots can split and crack foundation materials and infiltrate water and sewer lines. Branches can wear on siding, roofing and gutter materials. Shrubs up against a house can cause undue dampness and mold, which can cause deterioration of the structure and/or health hazards.

When damage is evident, the cause needs to be removed. This may mean simply removing the part of the tree or shrub that is contacting the home or, in more severe instances, removing the tree or shrub altogether.

When the potential for damage exists, such as when a large dead tree branch is leaning near or overhanging the home, grantees must remove the potential hazard.

6.1.9.2

Standard: **Finish grade, seeding, and landscaping:** When a new house is built, a fine finish grading **shall** be done around the house and across the yard. The yard **shall** be seeded or sodded with appropriate grass and/or ground cover. Appropriate and simple landscaping **should** be done. When an addition is built, new underground utility lines run, grade changes made, or the soil is otherwise disturbed, proper compaction and a fine finish grading **shall** be done, and the surface **shall** be seeded, mulched, and/or planted to match, as closely as feasible, the existing surrounding yard.

Commentary: The spending of an inordinate amount of funds for this purpose is not an appropriate fit with the intentions of affordable housing. However, when building a new house and establishing a new yard, it is recommended to give thought to the short and long term impact of the way that the surface of the yard is left, and of the choices of any landscaping and plantings on the occupants and the neighborhood. For example, yards left without proper grass or groundcover will be unsightly and lead to soil erosion, unsanitary conditions for the occupants and poor play areas for any children. The type of turf selected will have an impact on the water bill, and maintenance and watering requirements are worth consideration. The planting of a few simple, well placed shrubs and trees can add long term value to a house, will improve the appearance of the neighborhood, and can decrease cooling costs and/or be an effective wind break. The proper placement and selection of tree species that have deep, non-invasive root systems and strong limbs will help to avoid future problems such as clogged sewer lines and damage to the house from falling branches.

6.2 LIGHTING, VENTILATION, AND OCCUPANCY LIMITATIONS

6.2.1 ARTIFICIAL LIGHTING (ELECTRIC LIGHTING)

Standard: All habitable rooms (i.e. rooms for living, sleeping, eating or cooking), all occupiable spaces (including; bathrooms, toilet rooms, stairways, hallways, storage and utility rooms, and spaces containing appliances or equipment requiring safe operation and maintenance), and all exterior entrances **shall** be provided with electric light. Illumination **shall** be appropriate to the purpose of the room and sufficient to meet the needs of the occupant. All exterior entries **shall** be provided with an exterior light fixture that effectively illuminates the exterior entrance. Interior and exterior stairway lighting **shall** be in conformance with the RCO.

Commentary: Although many rooms have windows, natural light is not sufficient by itself. In order to provide sufficient light for routine household tasks and for safe movement within the home, OCD is requiring electric light sources in all spaces that are routinely used by the occupant and that contain equipment that must be maintained. This includes storage rooms and spaces such as basements, crawlspaces and attics that contain furnaces, water heaters and other equipment. For specific electrical wiring and fixture requirements, see RRS Sections 4.8.

The placement of light fixtures and the amount of light each fixture provides is important. However, except for interior and exterior stairways, OCD has not set specific illumination standards. Instead, the light source needs to be located so that it can provide enough illumination so that the occupant can perform tasks and move about safely. In areas where illumination is required for long periods of time, such as hallways and stairways, OCD recommends installing energy efficient hard-wired fixtures and lamps (e.g. compact fluorescent type lighting). For exterior installations such as security and porch lights, OCD recommends energy efficient lamps and photo-electrically controlled fixtures.

6.2.2 VENTILATION

Standard: For all habitable rooms, natural ventilation **shall** be provided through windows, doors, or louvers. Such openings **shall** be provided with ready access or **shall** otherwise be readily controllable by the building occupants. All newly constructed houses and room additions **shall** meet the requirements of the RCO.

Exceptions: An alternative method for ventilating the dwelling is through the use of a mechanical, whole house ventilation system. If this is to be the primary source of ventilation air, or to take the place of the required natural ventilation described above, then the system **shall** be adequate to produce 0.35 air changes per hour, **should** provide for both intake and exhaust air, all intake air **should** be filtered, and the intake air **should** be distributed in appropriate quantities to each habitable area through a system of ducts.

In some houses that achieve adequate ventilation air through natural means as described above, there may be value in having a mechanical ventilation system.

For example, some occupants may have severe allergies or other health problems that would necessitate such a system. Also, very tightly sealed houses with little air infiltration can benefit from the addition of a mechanical ventilation system. In these cases, a mechanical ventilation system **should** be installed. There are a number of different types of systems. Some systems provide only intake air. Some systems provide only exhaust air. As described above, some systems provide for both intake and exhaust air. When selecting a ventilation system for the specific purposes described above, thought **should** be given to the specific needs of the occupants, the specific characteristics of the house, and to the financial outlay that will be required for each of the various systems.

For specific rooms where inadequate ventilation through windows is not possible, such as the case of interior rooms with no outside walls, the need for ventilation air can be met in one of two ways. In these cases, either a mechanical ventilation system capable of producing 0.35 air changes per hour **shall** be installed, or the ventilation needs **shall** be met through natural means, as described above. If the adjoining room is to be used as a means for ventilation air, a non-closable doorway or other opening of at least 16 square feet **shall** be present between the two rooms.

Commentary: Adequate and controlled movement of air between habitable rooms and the outside is important in order to maintain a healthy environment. In most cases, this can be achieved naturally through opening windows in rooms where people spend the majority of their time. However, in kitchens and bathrooms, where cooking and bathing create excessive amounts of moisture, 6-4 mechanical ventilation (i.e. a ducted power vent fan) may be a necessary alternative. All bathrooms must be provided with a mechanical means of ventilation.

For specific standards on windows, see RRS Section 2.4. For specific standards on mechanical ventilation devices, see RRS Section 2.6.4

6.2.3 OCCUPANCY LIMITATIONS

Standard: Where feasible, occupancy limitations **should** conform to the International Property Maintenance Code (IPMC). In the case where a new room, such as a bedroom or bathroom is constructed, it **shall** be constructed and attached to the dwelling to conform to the minimum room areas outlined in the ORC.

Commentary: The IPMC establishes criteria for privacy, access from sleeping rooms, overcrowding, minimum ceiling heights and minimum room widths. These criteria should help ensure a reasonably healthy and comfortable environment. However, OCD recognizes that, in some instances, the criteria will not be able to be met without extensive and expensive alterations.

For example, constructing a hallway and a doorway to meet the IPMC requirement for separate bedroom entrances may not be possible because of the way the house is laid out, the cost, or because the owner objects to the alteration. Based on how the space in question is actually used by the occupants and the estimated cost of the alterations needed to strictly meet the IPMC standards, grantees may liberally interpret those occupancy standards.

It is not OCD's intention to require grantees to strictly follow the criteria outlined in the IPMC, when to do so would result in an unreasonable expansion or reduction of rehabilitation work. For example, if a habitable room is used as a bedroom, but is somewhat smaller than that allowed by the BOCA NPMC, OCD expects grantees to treat the space as a bedroom and not enlarge the space in order to classify it as a bedroom or conversely, deny that it is bedroom and treat it as some other kind of space.

6.3 HABITABLE SPACES

6.3.1 BEDROOMS

Standard: Each dwelling unit **shall** have the number of bedrooms (i.e. sleeping rooms) sufficient to provide the occupants with privacy. Bedrooms **should** be arranged so that persons do not have to pass through one bedroom to enter another bedroom or another habitable space. Kitchens, space that is not habitable, and basements that exhibit signs of moisture **shall not** be used as bedrooms. Each bedroom or sleeping area **shall** have a means of emergency egress as required in the RRS Section 6.6.1.

Commentary: Private and safe sleeping rooms are important for the physical health and psychological well-being of the occupants. Therefore, bedrooms must be located in safe habitable areas and there must be enough bedrooms with separate entrances to provide adequate privacy to the occupants. Safety and comfort are critical concerns where bedrooms are located below grade or in a basement. Therefore, each below grade or basement bedroom must meet the requirements of the appropriate structural, electrical and environmental sections of the RRS.

For example, the bedroom must have adequate heat, headroom and ventilation and be free from excessive moisture. If fuel burning equipment is also located in the basement, the equipment must be located and installed to conform to the RRS, Chapter 3, and combustion air requirements shall conform to the RRS, Section 3.4. Also, emergency egress must be provided as required by the RRS, Section 6.6.1. OCD does not recommend the conversion of any fully sub grade basement space for use as a bedroom.

OCD has not set a standard for the number of bedrooms required per number of occupants. Instead, OCD recommends that grantees use the occupancy limitation standards in the IPMC.

6.3.2 LIVING ROOMS, DINING ROOMS AND OTHER HABITABLE SPACES

Standard: Rooms routinely used for living **shall** meet the appropriate standards outlined in the structural, electrical and environmental sections of the RRS.

Commentary: Although most dwellings have space designated for more than cooking and sleeping, OCD has not established a standard for the number or type of habitable

spaces required for each dwelling unit. In other words, OCD is not requiring that dwellings have living rooms and dining rooms, etc.

6.4 OCCUPIABLE SPACES

6.4.1 KITCHENS

Standard: Each dwelling **shall** have a kitchen. The kitchen **shall** have a sink plumbed with hot and cold water. The kitchen **should** have adequate space for food preparation and storage, including space for a refrigerator, a range/stove/oven, an adequate number of cabinets and an adequate amount of counter top surface. Cooking equipment **shall** be safe and properly connected to the fuel supply. To be safe, gas-fired cooking appliances **shall** have a proper connection to the fuel supply and a shut off valve, and **shall not** be emitting high quantities of carbon monoxide into the house. Electrical cooking appliances **shall** be properly connected to the power with an appropriate pigtail in good condition. The condition of the sink, cabinets, counter tops, floor, wall and ceiling surfaces **shall** be functional, structurally sound and able to be maintained in a sanitary manner. For specific standards on interior floor, wall and ceiling coverings, see the RRS Section 2.3.6 and 2.3.8. For specific standards on electrical systems, see RRS Chapter 4. For specific standards on plumbing systems, see RRS Chapter 5.

Commentary: Kitchen spaces must be functional and adequate for the purpose of storing food and utensils, preparing meals, and washing dishes. This means that each kitchen space must have a fully plumbed sink, enough cabinets and counter top to store items and prepare meals, space for refrigeration and space for cooking equipment. Cabinets for the storage of food and cooking utensils must be in reasonably sound condition and not exhibit conditions which promote unhealthy storage.

Cooking equipment, especially gas-fired ranges and stove tops, must be installed properly. To improve indoor air quality, OCD recommends installing a power vent fan (ducted directly to the outside) above gas-fired ranges and stove tops. Repairing deteriorated but otherwise functional, cabinets is preferred over replacement.

OCD has not set standards regarding the placement of appliances, the minimum number of cabinets or the minimum amount of counter top area. OCD expects grantees to determine the adequacy of a kitchen's design and function based on the existing conditions and the characteristics of the household.

However, as a guideline, OCD recommends the following: 40 square feet. of cabinet shelving, 10 square feet of drawer space and 15 square feet of counter top space per kitchen.

6.4.2 BATHROOM/TOILET ROOM

Standard: Each dwelling **shall** contain adequate and private spaces designated for bathing and for the elimination of bodily wastes. Each space designated for bathing **shall** contain a safe, functional bathtub, shower or combination bathtub/shower plumbing fixture. Each space designated for waste elimination **shall** contain a safe and functional water closet and lavatory plumbing fixture. Bathrooms/toilet rooms **shall** not be located so as to provide the only passageway to a hall, other space or to the exterior. Exterior located toilet rooms (i.e. outhouses) are unacceptable when they are the sole source for waste elimination, and **shall** be replaced with plumbing facilities located within the dwelling.

The size and number of bathrooms/toilet rooms and the configuration of the plumbing fixtures **should** be adequate to the needs of the household. Fixtures **shall** be placed and designed so that they can be used safely and be maintained in a sanitary manner. When an occupant is handicapped or disabled, the location and configuration of the bathroom/toilet room and its plumbing fixtures **should** comply with the applicable construction standards in the Uniform Federal Accessibility Standards. When an occupant is elderly and/or frail, grab bars (properly secured to reinforced wall supports), easily operable faucets (i.e. faucets that do not require tight grasping, pinching or twisting of the wrist) and plumbing fixtures designed to accommodate accessibility, **should** be installed, as appropriate. For specific standards on interior floor, wall and ceiling coverings, see the RRS Section 2.3.6 and 2.3.8. For specific standards on electrical systems, see RRS Chapter 4. For specific standards on plumbing systems, see RRS Chapter 5.

Commentary: Safe, functional and private bathing and toilet facilities are required. In most single-family dwellings, the bathroom and the toilet room are combined so that the bathing plumbing fixtures and the toilet plumbing fixtures are contained in the same room. However, where they are separate, a lavatory (for hand washing) must be located in or adjacent to the room containing the toilet. OCD recommends the elimination of all existing outhouses in conjunction with the rehabilitation effort.

6.4.3 STORAGE AND UTILITY ROOMS

Standard: Storage and utility rooms **shall** meet the appropriate standards outlined in the structural, electrical and environmental sections of the RRS.

Commentary: Because most dwellings have adequate space designated for storage (e.g. cabinets, closets, basement, attic, etc.), OCD has not established a standard for the amount of storage space a dwelling should contain.

However, in cases where the amount of storage space is clearly inadequate and problematic for the household, adding storage space within the existing dwelling (e.g. installing shelves, adding cabinets, constructing a closet, etc.) is acceptable rehabilitation practice.

6.5 ACCESSIBILITY

Standard: Rehabilitation measures specifically intended to improve accessibility **should** meet the construction requirements outlined in the applicable sections of the Uniform Federal Accessibility Standards. Consideration **shall** be given to the specific accessibility needs of any identified occupants, and modifications **shall** be made to the dwelling to meet those needs.

Commentary: Making a home safer and more accessible for handicapped or disabled persons is a desirable benefit of rehabilitation. However, it is not OCD's intent to apply the Uniform Federal Accessibility Standards (UFAS) wholesale to privately owned homes undergoing rehabilitation. The UFAS applies only to federal buildings and federally funded facilities. However, OCD has cited the UFAS for the purpose of establishing the construction standard for specific accessibility measures that may be needed in a specific dwelling. For example, if an entrance ramp is needed, the UFAS describes the construction standards to be met. On newly constructed homes, OCD recommends making them accessible by providing at least one entrance with no steps, making interior and exterior doors wide enough for a wheelchair, adding wall reinforcement in bathrooms to make the future addition of grab bars easier, etc. Even if the immediate occupants will not be disabled, they may sell the house. Even if they stay there, they may have accessibility needs that develop over time, either because of an accident or illness, or just as a part of the natural aging process.

6.6 FIRE AND CARBON MONOXIDE SAFETY

6.6.1 EMERGENCY ESCAPE AND RESCUE OPENINGS

Standard: All dwellings **shall** provide a safe, continuous, and unobstructed exit from each interior room directly to the outside. The exit path from bedrooms **shall not** pass through other dwellings or rooms within the dwelling that are capable of being locked in a way that would obstruct exit from the bedroom. Exterior doors **shall** be easily operable from the inside without the need for keys. Each bedroom or sleeping area **shall** have at least one operable emergency escape and rescue opening directly to the outside that is in compliance with the RCO. When basements contain one or more sleeping rooms, emergency escape and rescue openings **shall** be required in each sleeping room, and each opening **shall** comply with the RCO.

Commentary: Direct and safe egress will help ensure a quick evacuation in case of fire. Exit paths that are impassible, indirect or obstructed by doors that may be locked or difficult to open significantly lengthen the time necessary to escape. To help ensure a safe egress, it may be necessary to create or modify an existing egress.

6.6.2 GARAGE TO DWELLING DOORS

Standard: Openings from a private garage directly into a room used for sleeping purposes **shall not** be permitted. Other openings between the garage and residence **shall** be equipped with solid wood doors not less than 1 3/8" in thickness, solid or honeycomb core steel doors not less than 1 3/8" thick, or 20 minute fire rated doors. Also see the garage separation requirements in the RRS, Section 2.3.7.

6.6.3 SMOKE DETECTORS AND CARBON MONOXIDE DETECTORS

Standard: Smoke detectors and carbon monoxide detectors shall be installed in the following areas:

Smoke Detectors: a) in each sleeping room b) outside each, separate sleeping area in the immediate vicinity of the bedrooms, c) one on each additional story of the dwelling including basements but not including crawl spaces and uninhabitable attics, in compliance with the RCO, Section 313. In dwelling units with split levels and without an intervening door between the adjacent levels, a smoke alarm installed on the upper level shall suffice for the adjacent lower level provided that the lower level is less than one full story below the upper level.

Multiple smoke detectors installed within the dwelling unit shall be interconnected in such a manner that the activation of one alarm will activate all of the alarms in the individual unit. Each dwelling shall have smoke detection devices located and installed as required in RRS Section 4.9. All smoke detectors shall be approved and listed by a recognized independent testing laboratory and placed as directed by the manufacturer and in accordance with NFPA 70A and NFPA 72.

Carbon Monoxide Detectors: One carbon monoxide detector **shall** be located in the dwelling. When installed in combination with a smoke detector the unit **shall** be hard-wired and interconnected with other smoke detectors in the dwelling unit.

6.6.4 STORED FLAMMABLE MATERIALS

Standard: Flammable materials (e.g. paint, solvent fluids, paper, rags, etc.) **shall not** be stored or accumulated in an unsafe or unapproved manner while the rehabilitation is in progress.

Commentary: Safe housekeeping practices for flammable materials, particularly volatile combustible liquids are an important fire prevention strategy. If such materials are stored inside the dwelling, they must not be stored near ranges, stoves, fireplaces or fuel-fired furnaces and water heaters. Because this standard may not be adhered to by the occupant after the rehabilitation is completed, OCD encourages grantees to educate occupants about the hazards of improperly stored flammable materials.

6.6.5 FOAM PLASTIC, FLAME SPREAD AND SMOKE DENSITY

Standard: Foam plastic materials, wall and ceiling finish materials and insulation materials that have a flame-spread classification greater than 200 or a smoke-developed index greater than 450 **shall not** be installed during construction, rehabilitation, or repair, as outlined in the RCO. Where these types of materials exist, they **should** be covered with safe materials or removed and replaced.

Commentary: This section of the RCO cites the requirements for ignition, flame spread and smoke generation of materials, and applies to foam plastics, interior finishes and insulation which are very hazardous in the event of a fire.

6.7 OCCUPANT HEALTH

6.7.1 ASBESTOS

Standard: All work to remove, contain or encapsulate asbestos **shall** comply with applicable federal, state and local regulations and laws.

Commentary: While asbestos abatement is not required for privately owned rehabilitation projects containing less than four dwelling units, it is possible for rehabilitation work to disturb asbestos. For example, rehabilitation work could include replacing warm-air heating ducts or hydronic heating pipes wrapped in asbestos containing materials. When such materials are in deteriorating condition, the removal of the asbestos containing material must be done properly by a licensed asbestos contractor and in accordance with applicable regulations and law. In cases where the asbestos containing material is not to be disturbed by rehabilitation, and is not in a deteriorating condition within the living space, OCD recommends that it be left alone.

6.7.2 INDOOR AIR QUALITY

Standard: The dwelling **shall** be free of known pollutants that exist at levels which threaten the health of the occupants.

Commentary: Any home (old or new) can have indoor air quality (IAQ) problems. Though diagnosing an IAQ problem can be difficult, the health benefits gained from correcting it can be substantial. Therefore, when an IAQ problem is suspected, the cause must be investigated so that measures designed to correct or mitigate the problem can be built into the rehabilitation scope of work. At a minimum, OCD recommends that further actions be taken where any of the following conditions exist:

a. Where the condition, type or location of the fuel-burning equipment or the vent system can allow carbon monoxide (CO) and other combustion by-products to enter the home. Examples of such conditions include; use of unvented appliances, a cracked heat exchanger, leaks in the vent system, a plugged vent or chimney flue, back-drafting due to inadequate draft or competition between appliances located in confined spaces.

b. Where unsealed forced-air heating system return ducts pass through areas which may draw moisture, CO or other pollutants into the home.

c. Where excessive moisture, mold or mildew is present.

d. Where the lack of plumbing vents or traps allow sewer gas to enter the home.

However, some conditions are less obvious. In fact, some conditions may not become problems until after the rehabilitation is completed.

Rehabilitation can exacerbate a latent IAQ problem because the balance between the structure, the mechanical systems and the occupant's use of the home was changed. For example, a home can develop a moisture problem (and mold growth) because the amount of uncontrolled air movement has been significantly reduced, but the source of the moisture problem was not identified and corrected.

Some IAQ problems can result from the materials installed during rehabilitation. For example, new floor coverings, paint, adhesive, etc. will "out gas" volatile organic compounds (VOCs). Though the IAQ should only be temporarily affected, some occupants may suffer adverse symptoms.

Some IAQ problems can result from the occupant's behavior. For example, occupants may not use the ventilation fans when bathing or cooking, or they may have behaviors that produce high levels of air-borne pollutants (e.g. smoking, using portable kerosene heaters, etc.). OCD recommends that grantees educate occupants about the IAQ problems their behavior may cause. In addition, to provide an early warning against CO poisoning, OCD requires the installation of a CO detector, which must be approved by an independent laboratory, receive their primary power from the buildings electrical wiring and be installed according to the manufacturer's installation instructions.

6.7.3 WATER SUPPLY

Standard: All dwellings **shall** have adequate, safe and potable water supplied through a safe plumbing system to all fixtures. Water drawn from private sources (privately owned wells) **shall** be tested by a local health department, or other qualified source, to determine the bacterial content prior to beginning the rehabilitation work.

Commentary: A safe and adequate supply of potable water for drinking, cooking and bathing is essential to occupant health. This includes having both hot and cold water available at sufficient pressure at all sinks, lavatories, bath tubs and showers.
To ensure that a private water supply system is safe, it must be tested for bacterial contamination, preferably by a local health department, or other qualified source, to determine the bacterial content prior to beginning the rehabilitation work.

6.7.4 SANITARY DRAINAGE

Standard: All plumbing fixtures (e.g. sink, lavatory, bathtub, shower, toilet, etc.) and all other plumbing appliances (e.g. dishwasher, clothes washing machine, etc.) **shall** be properly connected to either a public sanitary drainage system or to an approved private sanitary drainage system. Private sanitary drainage systems **shall** be inspected to ensure that they are properly and adequately functioning.

Commentary: Safe disposal of household liquid and solid waste is critical to a healthy environment. A sanitary drainage system that leaks waste or sewer gas into the home or that discharges untreated waste directly into the environment is a source of disease and illness. Therefore, a close inspection of the sanitary drainage system is very important.

At a minimum, the inspection would include inspecting for leaks, improperly installed materials, improperly connected materials, improper repairs, improper venting, missing traps, missing cleanouts and improper supports. For sanitary drainage system standards, see the RRS Section 5.4.

6.8 HISTORIC PRESERVATION

Standard: The rehabilitation of dwellings subject to the Section 106 Review Process of 36 CFR Part 800 **shall** comply with the findings and recommendations issued by the Ohio Historic Preservation Office.

Commentary: Rehabilitating older dwellings that may have “historic” or architectural significance requires special coordination with the Ohio Historic Preservation Office (OHPO). As a result, OHPO may require the rehabilitation scope of work to preserve or protect the historic character of the structure. In such cases, OCD expects grantees to follow the guidelines that OHPO may require. For guidance on what materials and measures are and are not recommended, see the U.S. Department of the Interior’s “Standards for Rehabilitation and Guidelines for Rehabilitating Historic Buildings” and contact the OHPO.

6.9 FLOOD PLAIN MANAGEMENT

Standard: The rehabilitation of dwellings located in a flood plain **shall** comply with applicable federal, state and local regulations and laws. The rehabilitation of dwellings located in a flood plain in jurisdictions participating in the Flood Protection Management System **shall** comply with the applicable Federal Emergency Management Agency regulations.

Commentary: The proximity of a dwelling to rivers and streams that are known to periodically flood can have a significant impact on the extent and the type of rehabilitation work that can be done. Therefore, grantees must determine if a dwelling is at risk and follow the appropriate guidelines. The flood plain management

guidelines may, on the one hand, limit the type of work which may be done and, on the other hand, specify certain flood proofing items which must be done.

Rehabilitating dwellings in jurisdictions participating in the Flood Protection Management System requires using special materials and methods not normally employed in areas not prone to flooding. Adherence to the additional construction standards is important to protect the dwelling against flood damage and to maintain the community's eligibility to participate in the National Flood Insurance Program.

Examples of special construction standards include; anchoring structures to prevent movement, raising utility services and mechanical system equipment above flood levels, protecting water and sewer systems against contamination and using water impermeable materials when possible.

Where flood proofing an existing home is not economically or physical possible, consideration ought to be given to alternative housing assistance such as relocating the household to an appropriate site or constructing a new approved structure on the site.

For information regarding flood plain management requirements, OCD recommends contacting the Ohio Department of Natural Resources, Division of Water and FEMA.

CHAPTER SEVEN

THE ELIMINATION OF LEAD-BASED PAINT HAZARDS

GENERAL REQUIREMENTS

Lead-based paint (LBP) renovation work is necessary to address an important health and safety issue. Lead-based paint hazards and work pose a real health and safety risk to all occupants and need to be taken seriously in all houses constructed prior to 1978. The safety of children under the age of six, pregnant women and women of child bearing years are the most important people to protect from lead based paint exposure. It is important to look at the big picture. The occupants may be an older couple, but have the grandchildren who visit frequently, thus exposing a child under six to lead hazards. To be effective, LBP work must accomplish the following:

- identify all possible lead hazards;
- identify the household and family characteristics;
- provide qualified contractors to perform work;
- provide adequate monitoring of work; and
- ensure that all identified lead-based paint hazards are eliminated and that the house is physically clear of lead dust above the allowable amounts.

It is up to the risk assessor to identify the lead hazards and family characteristics, and to develop a scope of work for dealing with the hazards, in conjunction with the rehabilitation specialist, who may be detailing the scope of other work to be done at the house. A plan must also be put in place for the scheduling of the work, including any necessary relocation. For abatement projects, a 10 day notice will be required by the Ohio Department of Health, which can also affect scheduling. This is important work and will help to ensure the safety of the occupants.

The program will need to ensure that qualified contractors will complete the work, and that they will be provided with adequate oversight to ensure that the work is done adequately and in a safe manner for both the workers and the occupants. Work not done properly or checked carefully could leave the house less safe than when the work started.

The clearance examination is probably the most important item on the list, because it ensures that the work was completed correctly. When the house passes clearance, the identified lead-based paint hazards and dust should no longer be a danger to any occupant in the house.

7.1 <u>GENERAL CONDITIONS</u>

Standard: All lead-based paint hazard reduction work **shall** be completed in accordance with HUD's Title X, 24 CFR part 35; House Bill 248; the Ohio Department of Health's (ODH) Regulations, and the provisions of this chapter.

Commentary: All projects completed through the Community Housing Impact and Preservation (CHIP) Program are required to comply with the federal and state requirements as outlined above. It is not the intention of this chapter to reiterate the existing lead regulations, but to provide additional requirements and clarification.

7.2 PROGRAM PERSONNEL REQUIREMENTS

7.2.1 QUALIFICATIONS FOR THOSE CONDUCTING RISK ASSESSMENTS

Standard: Identification of lead-based paint hazards **shall** be completed by a State of Ohio licensed Risk Assessor.

Commentary: Each program can make the decision, based on their own staff capacity and qualifications, whether they will have a risk assessment done by staff or whether they will contract with a separate organization for risk assessment services. If the rehabilitation specialist has a State of Ohio Risk Assessor's license, then he or she can act as the risk assessor.

7.2.2 QUALIFICATIONS FOR THOSE CONDUCTING CLEARANCES

Standard: Clearances **shall** be completed by a State of Ohio licensed Risk Assessor, licensed Clearance Technician or Paint Inspector for any remodeling and renovator/lead-safe renovator work. Clearances **shall** be completed by a State of Ohio licensed Risk Assessor or Paint Inspector for any **abatement** projects. See Chapter 3701-32 Ohio Administrative Code.

Commentary: Each program will have to decide who is going to do the clearance testing and verify they have credentials for the projects they undertake. Most jobs could run the risk of being an abatement job as easily as a lead-safe renovation job. These require different staff qualifications. A risk assessor on staff has the advantage of being able to schedule clearances quickly in comparison to a third party environmental firm with other clients. However, the third party environmental firm may have an advantage because they are not dealing with the contractor on a daily basis, and may be seen as an objective third party.

7.2.3 QUALIFICATIONS FOR THOSE WRITING SPECIFICATIONS

Standard: Specifications for all rehabilitation work **shall** be written by a licensed Risk Assessor, or a licensed Lead Abatement Contractor or Supervisor, or a Rehabilitation Specialist with one of these licenses or a lead-safe Renovation, Repair and Painting certificate. Lead Abatement Specifications **shall** be written by a State of Ohio Licensed Lead Abatement Contractor or Project Designer for all lead abatement work.

Commentary: The process is different for lead-safe renovation work and lead abatement work. Thus a determination of who is allowed to specify the work is different. Lead-safe renovation work's original purpose is renovation work, not lead abatement. The rehabilitation specialist or risk assessor who knows the house and the original intent of the work is the best person to write the specifications. Abatement work is still governed by the Ohio Department of Health and it requires a State licensed Lead Abatement Contractor or Lead Project designer to develop the abatement specifications.

7.3 PROCEDURAL PROTOCOL

7.3.1 RISK ASSESSMENTS

7.3.1.1

Standard: Presumption **shall** only be allowed in projects classified under the Home Repair activity where all painted surfaces which may be disturbed by the repair **shall** either be tested or **shall** be treated as though they contain lead-based paint. Presumption **shall not** be allowed in any other circumstance.

Commentary: Presumption can often lead to unnecessary costs by assuming lead hazards. With a tight budget, unnecessary costs should be avoided. The costs associated with properly addressing all friction and impact surfaces, bare soils, etc. on a rehabilitation project, when those surfaces may or may not be a hazard, can easily lead to wasted resources.

7.3.1.2

Standard: With the exception of the standard above (7.3.1.1), the requirement for when a risk assessment is required **shall** follow HUD's 24 CFR part 35.

Commentary: HUD spells out quite clearly when and where lead risk assessments are required. The risk assessor may wish to take stronger precautions when a child under six or a pregnant woman lives at the unit. The risk assessor may want to take extra XRF readings on friction, impact, chewed, deteriorated and/or peeling paint surfaces to show all existing lead hazard levels were below allowable limits.

7.3.1.3

Standard: The risk assessment **shall** identify lead-based paint **hazards** on the entire site including, but not limited to, detached garages, fences and play areas.

Commentary: The degree that lead paint is a hazard in out buildings, fences, etc. will depend largely on the amount of contact that children will have with these structures, which is why understanding the characteristics and dynamics of a household and their living patterns is important in assessing the degree that a particular structure or area is a hazard. While some circumstances may require these be addressed, such as Health Department orders, or extreme risk factors, OCD does not expect otherwise feasible projects to become walk-aways due to the financial restrictions of treating a property or part of a property that is not and will not be used for human residential habitation.

7.3.2 CLEARANCES

7.3.2.1

Standard: The requirement for when a clearance and where wipes are done and the qualifications required shall follow the more stringent of HUD's LSHR or the State of Ohio Department of Health rule OAC 3701-32. Clearance reports **shall** be completed and distributed per the requirements of 24CFR § 35.1340.

Commentary: Dust wipe locations are clearly defined by the Ohio Department of Health. When a child under six or a woman who is pregnant lives in the unit, a stricter protocol may be enacted by the program and may include the following locations for wipes: outside of all exterior entrances, the basement floor and the garage floor. A thorough cleaning of the house using techniques outlined in the HUD guidelines will be required to prepare for clearance. Some contractors hire firms that specialize in environmental cleaning for this purpose.

Clearance protocol is also defined in HUD's Guidelines for the Evaluation of Lead Based Paint Hazards in Housing. All trainings have used this protocol for assessments, inspections, and clearances.

7.3.2.2

Standard: The dust wipe and soil sampling procedures, and allowable clearance levels for dust wipes and soil samples **shall** follow the Ohio Department of Health's most current rule (currently, the allowable levels listed below):

Allowable wipe levels shall be below the following:

Floors	< 40 ug/ft^2
Window Sills	<250 ug/ft^2
Window Wells/Troughs	<400 ug/ft^2

Allowable soil levels shall be below the following:

Bare Soil Play Areas	<400 ppm
Non-play areas	<1,200 ppm

Commentary: These are the current levels for soil and dust wipe samples. It will be up to the program and risk assessor to keep up with the most current levels issued by the Ohio Department of Health.

7.3.3 <u>OCCUPANT PROTECTION</u>

7.3.3.1

Standard: The contractor **shall** submit an occupant protection plan, which includes a relocation plan if required in 24 CFR 35.1345. The occupant protection plan **shall** minimally include the elements outlined in Appendix 7 - B and **shall** be approved by the risk assessor (as required in 7.3.1.2) and the rehabilitation specialist, and acknowledged by the homeowner before any work is performed. Documentation **shall** be included in the file. A policy **should** be developed so that persons who have insufficient income to pay for relocation expenses, and do not have relatives or close friends in the area, are not precluded from receiving assistance.

Commentary: Every unit has different household and lead-based paint circumstances. Will the lead-based paint work involve the whole house or a limited area? What are the ages of the occupant(s)? How long will the lead work take? Will the program provide any assistance to owner-occupied properties for temporary relocation while the rehabilitation and hazard mitigation work is progressing? It will have to

be decided on a unit-by-unit basis what will work for relocation. Because the housing rehabilitation program is voluntary, the program can require that homeowners with sufficient resources or with willing family or close friends in the area that have adequate accommodations, to be responsible for finding alternative accommodations during the rehabilitation and lead hazard mitigation work. A number of precautions can be taken to help to ensure that residents do not re-enter the property prior to clearance. For example, the locks on the doors could be changed during the time that the work is in progress

7.3.3.2

Standard: Due to the health risks involved and the contractor's liability, where potential hazards still exist, residents who were relocated shall **not** be allowed to enter the work site prior to achieving clearance.

Commentary: Lead-based paint hazard reduction work can leave a fine dust that is invisible to the naked eye, and therefore it is important that clearance is achieved prior to the household re-occupying the structure following this work

7.3.4 CHANGE ORDERS

Standard: Change orders that in any way affect lead safe renovation work **shall not** eliminate the lead hazard reduction work. Specifications **should** be rewritten to accommodate for the change in the scope of work.

Commentary: Although change orders should generally not entail any new procedures, an item that is added or deleted from a specification that involves a painted surface needs to be considered more carefully. For example, if a window was initially going to be replaced, and later during the project it was decided to delete that particular item, normally the item and the specification would be deleted. In a project involving lead hazard reduction work, instead the window likely would need to have a specification written to have interim controls applied to any friction surfaces or deteriorated paint.

HUD and OCD recognize that unanticipated change orders are common in rehabilitation projects. Therefore, a recalculation of the level of assistance will not be required for the purposes of the lead-based paint regulation, and thus will not require a change in the category of lead-based paint requirements, as a result of a change order; except that if a pattern is found that indicates an obvious abuse of this policy to avoid more protective requirements, the Department will find the designated party in noncompliance.

7.4 SPECIFICATIONS

7.4.1 REHABILITATION COSTS DETERMINE LEAD SPECIFICATIONS

Standard: As per HUD's 24 CFR part 35, the rehabilitation costs **shall** determine whether the project is an abatement project or if interim controls may be performed. See below for a brief outline:

a) **$0 - $5000**: Repair disturbed paint surfaces and clear the worksite(s), not

entire unit. (if paint testing shows no lead present then neither safe work practices nor clearance is required). The worksite must be isolated from other areas of dwelling. For clarification, only those projects under $5000.00 may use the de-minimus rule.

b) **$5,001 – $25,000**: Perform interim controls on identified hazards and any lead-based paint hazards created by rehabilitation work. Clean and clear unit. (Home Repair projects in excess of $5000.00 may follow part (a) above.) Specifications for interim controls may be written by a qualified rehab specialist.

c) **$25,001 and greater**: Perform abatement on identified hazards and any lead-based paint hazards created by rehabilitation work, except that interim controls can be used on exterior surfaces. Clean and clear unit. Scope of work may be written by a qualified rehab specialist. Specifications for abatement shall be written by an Abatement Contractor or Project Designer.

Commentary: This is a brief outline of the process and the HUD guideline should be referenced for a full explanation. To help make this determination, it is important to understand a few key concepts listed below:

- HUD regulations allow the cost of lead hazard control work and related costs to be deducted from the project cost in order to adjust (lower) the figure to be used in determining which of the above categories (a ,b or c above) applies. A worksheet is provided for this computation in Appendix 7 – A.

- "Interim Controls" are temporary methods to control lead-based paint hazards in place. "Abatement" is permanently controlling lead hazards.

- Three factors can make a project an abatement project:

  1. If the hard cost calculation exceeds the $25,000 per unit cost figure (per HUD regulations).

  2. If the intent of the activity is to permanently control lead hazards.

  3. If the housing unit is occupied by a child under six years of age with an EBL.

- Rehabilitation that involves the removal of components does not automatically make them "abatement". HUD and EPA issued a joint memo on this issue, which indicates that **intent** is the key issue. If the intent of the work is to make a unit permanently free of lead hazards, such as window replacement, then it becomes abatement. If the intent of the activity is rehabilitation, then such window replacement would just be a rehabilitation cost (though it still would need to be done in a lead-safe manner).

- The worksheet in Appendix 7 - A effectively accomplishes both determining the HUD rehabilitation cost amount and the intent of the activity. Using the window replacement example, if this cost were classified as a rehab cost, it would be consistent with rehabilitation, if it were classified as a lead reduction

cost, then it would indicate an abatement project (remember window replacement is not an interim control). Note that removal or replacement of a component should never need to fall into the "lead hazard control" category in a housing rehabilitation program. The reason is that the rehab specialist will have determined that either the window is in such poor condition that it needs to be replaced (thus a rehab item) or it is structurally sound, so that interim controls can be applied (a rehabilitation lead-safe renovation item). In this way the worksheet becomes both a means of computation of the HUD rehabilitation as well as verification that the intent of the activity was rehabilitation, not lead hazard control.

7.4.2 NON-TESTED SURFACES

Standard: The written specifications for homes identified with lead-based paint **should** address the treatment of hard to clean and porous surfaces that have not been identified as containing high dust levels. Treatment could include painting or sealing of the surface as a standard practice.

Commentary: Treatment of the surface during the work process may help eliminate required retests on hard to clean surfaces and allow the job to be finished more quickly and without extra costs to the contractor.

7.4.3 DE-MINIMIS LEVELS

7.4.3.1

Standard: The following de-minimis levels **should** be used to determine whether the work on that surface is going to disturb an excess amount of lead based paint and require working lead safe:

- 2 square feet per room, or 10 percent of a small component type;
- 20 square feet on all exterior surfaces or;
- hazard reduction activities disturb < 20 square feet on exterior surfaces or 10 percent of component with small surface area

Commentary: The de-minimis exception may only be used for projects less than $5,000

7.4.3.2

Standard: The program **should** indicate in the work specifications where the de-minimis exemption would apply, and to caution that efforts **should** be made to minimize dust generation.

7.5 QUALIFICATIONS OF CONTRACTORS AND EMPLOYEES

7.5.1 QUALIFICATIONS OF CONTRACTORS

Standard: All contractors, specialty trade contractors, and subcontractors that will be involved in the routine performance of lead-based paint interim control work or who will be responsible for work involving the routine disturbance painted paint surfaces shall take the Renovators, Repair and Paint training course. Renovations in target (pre-1978) housing and child-occupied facilities **shall** be conducted by certified renovation firms, using renovators, specialty trade contractors, and subcontractors with accredited training, and following the work practice requirements of the rule and all work shall be done in a lead-safe manner.

- The general contractor **shall** ensure that all lead hazard control work is done by qualified individuals, as outlined in the standard above and in 7.5.2, and that all work is done in a lead safe manner.

Commentary: With new subcontractors being used to complete projects in a timely manner, a one-day class may not be readily available. The intention is not to eliminate a subcontractor because they cannot attend the class. It should not pose a problem for a subcontractor to coordinate with the general contractor to perform some minor demolition or disturb the painted surface and allow the subcontractor to proceed with his work till he can take the one-day class.

7.5.2 <u>QUALIFICATIONS OF EMPLOYEES</u>

Standard: All employees of contractors, specialty trade contractors, and subcontractors, that will be routinely performing lead-based paint interim control work or disturbing lead-based paint surfaces **shall,** comply with the EPA and HUD requirements of the Renovators, Repair, and Painting rules. Until they have completed the training, they **shall** work under the direct supervision of trained persons on site. All employees performing lead based paint abatement work **shall** be either a State of Ohio licensed worker or supervisor.

Commentary: HUD regulations require that all workers and supervisors must complete a HUD approved curriculum in lead safe work practices, except that non-certified renovation workers need only on-the-job training if they are supervised by a certified LBP abatement supervisor who is also a certified renovator. Renovation firms must be certified. At least one certified renovator must be at the job or available when work is being done. The certified renovator may be a certified LBP abatement supervisor who has completed the 4-hour RRP refresher course.

The lack of qualified staff on-site has raised concerns, particularly if contractors are working on more than one project, or if the trained person is not working on a particular day. There are also liability and worker safety concerns regarding the long-term exposure of untrained persons to potential lead-based paint hazards. **The program is therefore adopting a policy of requiring that all persons** that will be performing rehabilitation activities on units built before 1978 be required to have successfully completed the Renovation, Repair, and Painting Training, as described in the standard above.

7.6 DOCUMENTATION

7.6.1 REQUIRED DOCUMENTATION IN THE FIELD

Standard: All contractors **shall** have a copy of the following items on site for review by a program representative during any lead based paint work:

- lead certificates for all employees
- the work plan for the specific job
- copy of Occupant Protection Plan

Commentary: Maintaining a simple folder with these required forms will allow whoever stops at the site to verify that the workers are qualified to do the work and that they have a plan to do the lead-based paint hazard control/abatement work.

7.6.2 REQUIRED DOCUMENTATION IN THE FILE

7.6.2.1

Standard: The contractor **shall** provide the program with a two-day notice prior to beginning any lead interim control jobs. The contractor **shall** provide the Ohio Department of Health and the program with a ten-day notice prior to beginning all lead abatement jobs. Case files shall also contain the following documentation:

- Lead Screening Worksheet.
- If the project is exempt indicate cause for exemption. No further steps are required.
- Cost Computation (Rehab Projects only)
- Risk Assessment/Notice of presumption (copy)
- Lead Safe/Abatement Specifications
- Contractor Occupant Protection Plan(copy)
- Prior ODH abatement notification (if applicable)
- Interim “Lead” Inspection Report
- Clearance results
- Copy of Clearance report and letter to homeowner.

Commentary: Documentation of lead testing and treatments is not optional. This helps to insure that lead activities are completed in the required manner.

7.6.2.2

Standard: The risk assessor/rehabilitation specialist **shall** visit the site a minimum of one time when the lead-based paint hazard control work is in progress and document the visit with an interim lead inspection report (see Appendix 7 - A), which **shall** be included in the client file. The actual number of visits required **shall** be determined by a risk analysis form (see Appendix 7 - B) that **shall** also be included in the client file.

Commentary: The risk assessor/rehabilitation specialist needs to keep track of the project and must not neglect the importance of being on site during lead-based paint hazard

control work. These forms will keep the record process simple and straightforward for monitoring purposes.

7.6.3 POST-GRANT REQUIREMENTS ON LEAD WORK

Standard: The administering agency for the local program **shall** provide the homeowner with written guidelines and general maintenance requirements for all interim control work performed on the unit. Documentation that the homeowner received this information **shall** be provided in the client file. It **shall** be documented that they understand that the maintenance of this work is their responsibility.

APPENDICES

PROPERTY INSPECTION LIST
INSPECTABLE AREA: GENERAL SITE
APPENDIX 1-A

Property ID / Name: _____

Inspection Date: _____

Inspector Name: _____

			Level				
Inspectable Item	**Observable Deficiency**	**NOD**	**1**	**2**	**3**	**NA**	**H&S**
Grounds	Erosion/Rutting Areas						
	Overgrown/Penetrating Vegetation						
	Ponding/Site Drainage						
Health & Safety	Air Quality - Sewer Odor Detected						
	Air Quality - Propane/Natural Gas/Methane Gas Detected						LT
	Electrical Hazards - Exposed Wires/Open Panels						LT
	Electrical Hazards - Water Leaks on/near Electrical Equipment						LT
	Flammable Materials - Improperly Stored						
	Garbarge and Debris - Outdoors						
	Hazards - Other						
	Hazards - Sharp Edges						
	Hazards - Tripping						
	Infestation - Insects						
	Infestation - Rats/Mice/Vermin						
Driveways	Cracks						
	Ponding						
	Potholes/Loose Material						
	Settlement/Heaving						
Retaining Walls	Damaged/Falling/Leaning						
Storm Drainage	Damaged/Obstructed						
Walkways/Steps	Broken/Missing Hand Railing						
	Cracks/Settlement/Heaving						
	Spalling						

In order to accurately categorize a deficiency as a "Level 1", "Level 2" or "Level 3" (including independent Health & Safety items), you must refer to the Final Dictionary of Deficiency Definitions (PASS) Version 2.3, dated 03/08/2000. This document can be found at "http://www.hud.gov/offices/reac/pdf/pass_dict2.3.pdf" (325 Pages, 343 KB)

Additional clarification to these definitions is contained in the REAC PASS Compilation Bulletin which can be found at "http://www.hud.gov/offices/reac/pdf/pass_bulletin.pdf" (24 Pages, 275 KB)

Only level 3 is applied to independent Health & Safety deficiencies.

In the H&S column, NLT is a "Non-Life Threatening" Health & Safety concern whereas LT is a "Life Threatening" concern which calls for immediate attention or remedy and will show up on the Exigent Health and Safety Report at the end of an inspection.

No Observed Deficiency (NOD)

PROPERTY INSPECTION LIST
INSPECTABLE AREA: EXTERIOR
APPENDIX 1-A

			Level				
Inspectable Item	**Observable Deficiency**	**NOD**	**1**	**2**	**3**	**NA**	**H&S**
Doors	Damaged Frames/Threshold/Lintels/Trim						
	Damaged Hardware/Locks						
	Damaged Surface (Holes/Paint/Rusting/Glass)						
	Damaged/Missing Screen/Storm/Security Door						
	Deteriorated/Missing Caulking/Seals						
	Missing/Damaged Door						
Foundations	Cracks/Gaps						
	Spalling/Exposed Rebar						
Health and Safety	Electrical Hazards - Exposed Wires/Open Panels/GFI						LT
	Electrical Hazards - Water Leaks on/near Electrical Equipment						
	Hazards - Other						
	Hazards - Sharp Edges						
	Hazards - Tripping						
	Infestation - Insects						
Lighting	Broken Fixtures/Bulbs						
Roofs	Five Year Life Expectancy						
	Chimneys- Inspection Required						
	Damaged Soffits/Fascia						
	Damaged Vents						
	Damaged/Clogged Drains						
	Damaged/Torn Membrane/Missing Ballast						
	Missing/Damaged Components from Downspout/Gutter						
	Missing/Damaged Shingles						
	Ponding						
Walls	Cracks/Gaps						
	Missing/Damaged Caulking/Mortar						
	Missing Pieces/Holes/Spalling						
	Stained/Peeling/Needs Paint						
Windows	Broken/Missing/Cracked Panes						
	Damaged Sills/Frames/Lintels/Trim						
	Damaged/Missing Screens						
	Missing/Deteriorated Caulking/Seals/Glazing Compound						
	Peeling/Needs Paint						
	Security Bars Prevent Egress						
Stairs/Porch/Balcony	Baluster/Side Railings/Hand Rails Damaged or Missing						

PROPERTY INSPECTION LIST
INSPECTABLE AREA: INTERIOR
APPENDIX 1-A

Inspectable Item	Observable Deficiency	NOD	Level 1	Level 2	Level 3	NA	H&S
Kitchen	Cabinets - Missing/Damaged						
	Countertops - Missing/Damaged						
	Garbage Disposal						
	Plumbing - Clogged Drains						
	Plumbing - Leaking Faucet/Pipes						
	Range Hood/Exhaust Fans - Excessive Grease/Inoperable						
	Sink - Damaged/Missing						
Bathroom	Bathroom Cabinets - Damaged/Missing						
	Lavatory Sink - Damaged/Missing						
	Plumbing - Clogged Drains						
	Plumbing - Leaking Faucet/Pipes						
	Shower/Tub - Damaged/Missing						
	Ventilation/Exhaust System - Inoperable						
	Water Closet/Toilet - Damaged/Clogged/Missing						
	Peeling/Water Damage/Mold/Mildew- (Requires Mech Vent)						
Laundry Area (Room)	Dryer Vent - Missing/Damaged/Inoperable						
	Plumbing - Clogged Drains						
	Plumbing - Leaking Faucet/Pipes						
	Water Stains/Needs Paint						
Doors	Damaged Frames/Trim						
	Damaged Hardware/Locks						
	Damaged Surface - Holes/Paint						
	Door-Missing/Inoperable *						
Floors	Bulging/Buckling						
	Floor Covering Damage						
	Missing Flooring Tiles						
	Peeling Paint						
	Rot/Deteriorated Subfloor						
Walls	Bulging/Buckling						
	Damaged						
	Damaged/Deteriorated Trim						
	Peeling Paint						
	Water Stains/Water Damage/Mold/Mildew						

PROPERTY INSPECTION LIST
INSPECTABLE AREA: INTERIOR
APPENDIX 1-A

			Level				
Inspectable Item	**Observable Deficiency**	**NOD**	**1**	**2**	**3**	**NA**	**H&S**
Windows	Cracked/Broken/Missing Panes						
	Damaged Window Sill						
	Missing/Deteriorated Caulking/Seals/Glazing Compound						
	Inoperable/Not Lockable						
	Peeling Paint						
	Security Bars Prevent Egress						
	Provides Acceptable Egress- Bedrooms/Sleeping Areas						
Stairs	Broken/Damaged/Missing Steps						
	Broken/Missing Hand Railing						
Electrical System	Blocked Access to Electrical Panel						
	Burnt Breakers						
	Evidence of Leaks/Corrosion						
	Frayed Wiring						
	Missing Breakers/Fuses						
	Electrical Hazards - Exposed Wires/Open Panels						
	Electrical Hazards - Water Leaks on/near Electrical Equipment						
	Missing Covers						
	Circuits Overloaded						
Lighting	Missing/Inoperable Fixture						
Outlets/Switches	Missing/Damaged						
	Missing/Broken Cover Plates						
	Sufficient Receptacles to prevent regular or prolonged use of extension cords						
	GFCI **						
Smoke Detectors	Are there hard wired Smoke Detectors in All Bedrooms & On Each Level						
HVAC System	Meets 5 Year Life Expectancy						
	Convection/Radiant Heat System Covers Missing/Damaged						
	Inoperable						
	Misaligned Chimney/Ventilation System						
	Noisy/Vibrating/Leaking						
	Rust/Corrosion						
Hot Water Heater	Misaligned Chimney/Ventilation System						
	Inoperable Unit/Components						
	Leaking Valves/Tanks/Pipes						
	Pressure Relief Valve Missing						
	Rust/Corrosion						

PROPERTY INSPECTION LIST
INSPECTABLE AREA: INTERIOR
APPENDIX 1-A

Inspectable Item	Observable Deficiency	NOD	Level 1	Level 2	Level 3	NA	H&S
Environment	Air Quality - Mold and/or Mildew Observed						
	Air Quality - Sewer Odor Detected						
	Air Quality - Propane/Natural Gas/Methane Gas Detected						
	Flammable Materials - Improperly Stored						
	Garbage and Debris - Indoors						
	Hazards - Other						
	Hazards - Sharp Edges						
	Hazards - Tripping						
	Infestation - Insects						
	Infestation - Rats/Mice/Vermin						
Required Inspections	Lead Risk Assessment/Paint Testing						
	Combustion Analysis (Furnace, Water Heater, Range, Other)						
	Gas Line Leak Test						
	Wood Boring Insect						
	Private Water Source						
	Private Septic System						
	Electrical, Include Load Calculation						
	Plumbing						
	A/C Refrigerant Leak						

* All bedrooms and bath rooms must have doors capable of closing securely.

** All Kitchen, Bath, Unfinished Basement, Garage and Exterior Receptacles Must Be GFCI Protected, Except as allowed by code

*** Any Item Classified As Level Three Must Be Corrected

NOTES

APPENDIX 2 – A

ENERGY AUDITS

Energy Audits initially became popular in response to the energy crisis of 1973 and in later years. Interest in energy audits has increased as a result of growing understanding of the human impact upon global warming and climate change. An energy audit is a process, rather than a single event that includes the inspections by qualified personnel and remedies performed by general contractors. Energy audits are completed to identify and prioritize energy conversation measures that are practical and cost effective.

The specific purpose of an energy audit is to:

- Estimate labor and material costs for energy measures identified
- Project the savings expected from installation of energy conservation measures
- Identify major energy using devices in the household
- Identify and recommend appropriate energy conservation, operation, and maintenance procedures
- Identify current and potential health and safety problems and how they may be affected by measures identified in the audit
- Identify lifestyle changes that reduce energy consumption
- Identify behavioral changes that could reduce energy consumption
- Educate the residents how the can use energy more efficiently
- Provide a written record of decision making

Energy conservation measures performed should:

- Conserve energy and save money
- Increase comfort
- Enhance the health and safety of the building occupants

A simplified approach called the UA delta-T method (found at the following link: http://160.36.48.42/546c/LECTURES/HEAT%20FLOW/HeatLossLect.html) can be used for approximate results. The audit may also assess the efficiency, physical condition, and programming of mechanical systems such as heating, ventilation, air conditioning equipment,

and thermostat.

Factors that should be considered while performing an audit include:

- Past and present energy use of the household
- Various characteristics of the building envelope including walls, ceilings, floors, doors, windows, and skylights
- The surface area and R-value of each of the building characteristics listed above
- The leakage rate, or infiltration of air, through the building envelope
- Age, condition, and steady state efficiency of appliances
- Client behavior and lifestyle
- Age and condition of the dwelling, along with surrounding climate
- Existing health and safety problems such as moisture, mold, mildew, and lead-based paint
- Cost effectiveness of measures to be performed

APPENDIX 2 – B

CALCULATIONS FOR DETERMINING SEASONAL HEAT LOSS AND PAYBACK

This appendix is intended to provide a mechanism for determining the cost-effectiveness of installing insulation in cases when there is doubt. In most cases, insulation is cost-effective and the RRS has set standards for attic, wall and floor R-values. However, there may be instances when the cost-effectiveness of adding insulation is not clear. For example, there may be a question whether adding more insulation to an already insulated space is economically worthwhile. Or, the same doubt may exist when any one of a number of factors exists, such as: low fuel cost, high installation cost, small area, etc.

Several things must be known before the calculation can be completed:

1. The R-value (measurement of heat flow resistance) of the materials in the area in question;

2. The U-value (measurement of heat flow) of the materials in the area in question. U-value is the reciprocal of R-value and represents the number of BTUs/hr./sq. ft. flowing through the material;

3. The Heating Degree Days (HDD) for the locality. HDDs represent the number days the outdoor temperature is below 65° F times the number of degrees difference between 65° F and the actual outdoor temperature. HDDs are generally averaged over 30 years and are available for large cities. For Ohio, Cincinnati has approximately 4,410 HDDs, Columbus approximately 5,660 HDDs, Cleveland approximately 6,351 HDDs, Akron approximately 6,037 HDDs, Dayton approximately 5,622 HDDs, Mansfield approximately 6,403 HDDs, Toledo approximately 6,491 HDDs and Youngstown approximately 6,417 HDDs;

4. The size (square foot area) of the area in question; and

5. The cost of the fuel per unit (dollars per gallon, cents per therm, cents per kWh, etc.)

STEP 1: Calculating Seasonal Heat Loss Without Insulation

Complete the following formula:

$$U \times A \times T \times 24 = Q$$

Where: U = the U-value of the building materials (Btus/hr/sq.ft.)
A = the surface area of the building materials (sq.ft.)
T = HDDs
24 = the number of hours in one day
Q = the total annual amount of heat loss (Million Btus or therms)

STEP 2: Calculating Seasonal Heat Loss With Insulation

Repeat the formula in Step 1 using the U-value that would exist assuming the building component is insulated.

STEP 3: Calculating Energy Savings and Dollar Savings

a. Subtract the amount of annual heat loss calculated after insulation (the result of Step 2) from the amount of annual heat loss calculated before insulation (result of Step 1). The result is the amount of energy that will be saved each year (Million Btus or therms).

b. Multiply the amount of energy saved by its cost. The result is the amount of money that will be saved each year.

STEP 4: Calculating Payback and Annual Return

a. Multiply the cost to install one square foot of insulation by the total number of square feet of area to be insulated. The result is the total cost of the insulation work.

b. Divide the amount of money saved (the result of Step 3, b) into the total cost of the insulation work (the result of Step 4, a). The result is the number of years it will take for the annual savings achieved by the insulation to off-set the additional cost to install it. After that time, the savings will accrue to the owner.

c. For the annual rate of return, divide the cost of the insulation work by the money saved.

APPENDIX 3 – A

COMBUSTION TESTING PROCEDURES

To ensure safe and efficient burner operation, all residential, commercial and industrial space and process heating equipment must be properly tested for:

- Carbon monoxide
- Smoke (Fuel oil only)
- Excess air
- Stack temperature
- Draft

Oxygen, Carbon Monoxide and Stack Temperature

The measurement for gases and temperature should be taken at the same point. Typically, this is done by selecting a sample location 'upstream' from the draft diverter/hood, barometric control or any other opening, which allows room air to enter and dilute flue gases in the stack. In larger installations it may also be necessary to extract a number of samples from inside the flue to determine the area of greatest flue gas concentration. Another common practice is to take the flue gas sample from the 'Hot Spot' or the area with the highest temperature.

Make sure that the sample point is before any draft diverter/hood or barometric damper so that the flue gasses are not diluted and the stack temperature has not been decreased by surrounding air used to balance the draft.

The sample point should also be as close to the breach area as possible, again, to obtain an accurate stack temperature. This may also provide a more accurate O_2 reading should air be entering the flue gas stream through joints in sheet metal vent connectors.

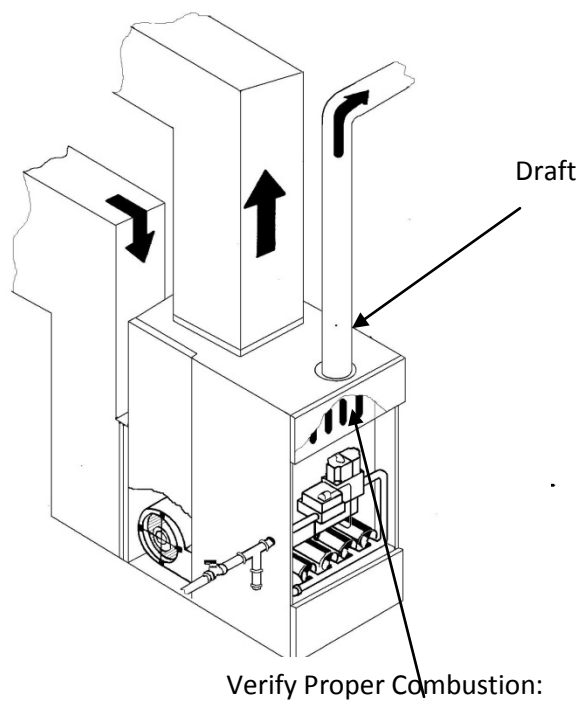

When testing **atmospheric, forced air heating equipment** with a clamshell or sectional heat exchanger design, test each of the exhaust ports at the top of the heat exchanger. The probe should be inserted back into each of the exhaust ports to obtain a flue gas sample, before any dilution air is mixed in.

Draft tests should be taken from a hole drilled in the stack downstream from the draft hood.

Combustion and draft testing fan assist, furnaces/boilers

- O_2
- CO Air Free
- Stack Temp
- SSE

80% Fan Assist Furnace/Boiler

should be done through a hole drilled in the vent, immediately above the inducer fan.

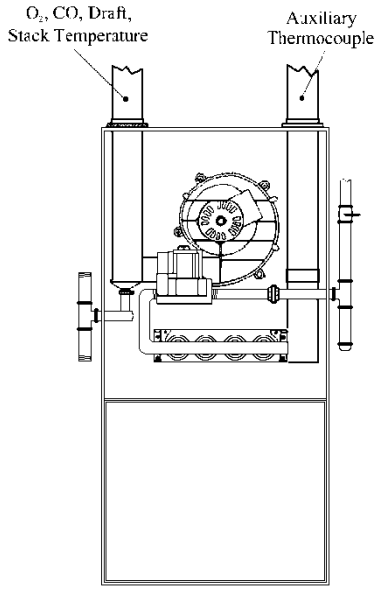

90% Condensing Furnace/Boiler

Condensing furnaces/boilers can be tested through a hole drilled in the plastic vent pipe (when allowed by the manufacturer or 'local authority of jurisdiction) or taken from the exhaust termination.

In order to obtain an accurate Steady State Efficiency reading, an auxiliary thermocouple must be inserted in the combustion air intake so that a true net stack temperature is used in the calculation.

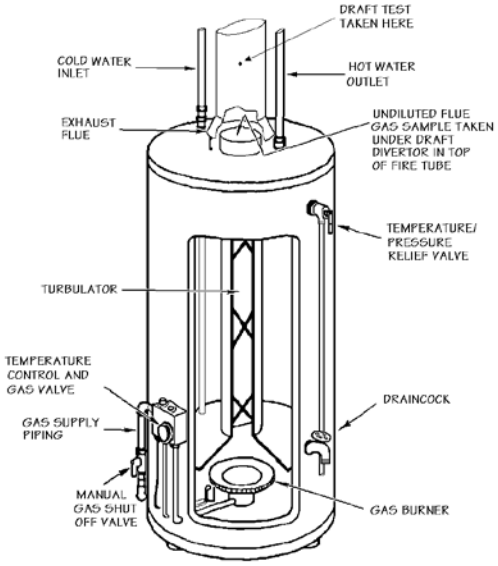

Gas Fired Domestic Hot Water Tank

It is important to remember that the vent system on these units operates under a positive pressure. As a result, any holes in the vent need to be sealed.

Domestic hot water heaters with the 'bell' shaped draft diverter on top can be accurately tested by attaching a section of copper tubing to the probe or using a flexible probe which is then inserted directly into the top of the fire tube below the diverter.

Another common practice is to insert the probe in the hole drilled for the draft test, direct it down and push it below the level of the draft hood.
When testing boilers with a draft diverter mounted on the back of the equipment, flue gas samples should be taken by passing the probe from one side to the other, again upstream (toward the burner) from the opening into the draft diverter.

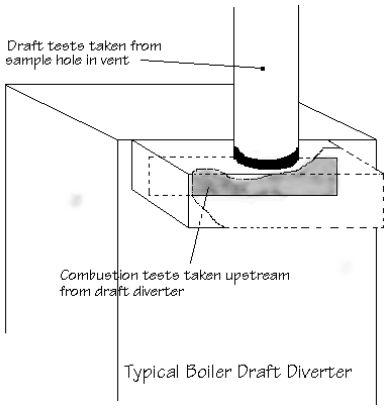

Typical Boiler Draft Diverter

Draft tests should be taken from a hole drilled in the vent connector immediately above the diverter.

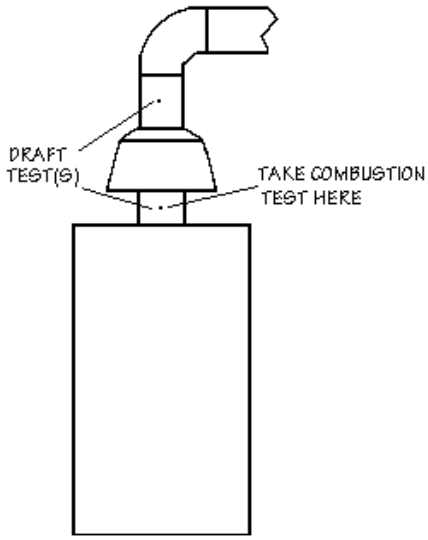

Typical Atmospheric Boiler

Boilers, which have a 'bell' shaped draft diverter directly on top, should be tested directly below the diverter through a hole drilled in the vent connector.

Should draft tests below the diverter measure insufficient draft levels, an additional test should be performed above the diverter to determine if the reason for insufficient draft is related to a chimney problem or a draft hood problem.

It is also a good idea to test any areas with openings that provide a path for combustion air to be introduced to the flame. These areas provide a path where flue gases can potentially be exhausted.

With forced air systems this area is generally limited to immediately in front of the burners while many styles of boilers allow secondary combustion air to also be drawn in from all around the base of the cabinet.

Gas and oil fired power burners should be tested upstream from the barometric, as close to the breech area as possible.

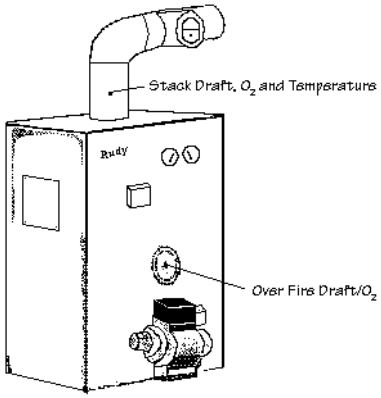

While stack draft may be an important measurement, fuel oil and gas fired power burners require draft control over the fire to maintain a proper and controlled intake of combustion air.

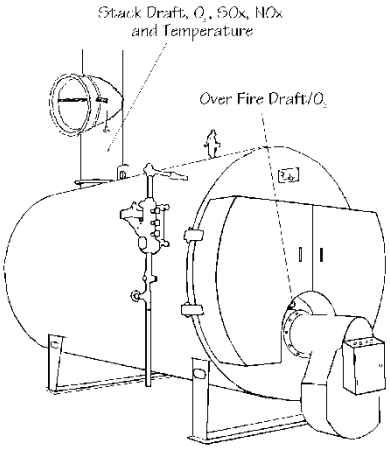

Comparing stack and overfire O_2 can verify that leakage between boiler sections, access door, etc., is minimal and the combustion test results are accurate.

Use caution when taking over fire O_2 readings. Do not expose thermocouple or sampling assembly to excess temperatures longer than necessary.

When testing (primarily commercial/industrial) equipment with modulating or multiple firing rates, it is critical that tests are performed throughout the entire firing range.
Failing to test throughout the entire cycle of burner operation may not identify a particular point at which O_2 readings are outside the manufacturer's specifications or excess levels of CO are produced.

Acceptable Combustion Test Results

It is very important to consult with the manufacturer or their literature to determine acceptable ranges of O_2, CO, Stack Temperature, Steady State Efficiency, Smoke and Draft. Requirements for NO, NO_2 and SO_2 emissions (if any exist) vary from local to local.

The following ranges are generally considered acceptable for residential/commercial/industrial units; always check with the appliance manufacturer of specific recommendations, particularly when testing 90 percent residential equipment as recommended test results vary considerably from manufacturer to manufacturer, particularly on 2 stage firing rates.

Residential/Light Commercial Gas Fired Equipment

Combustion Readings	Atmospheric Furnaces, Boilers and Hot Water Tanks	80%, Fan Assist Furnaces, Boilers and Hot Water Tanks	90%, Condensing Furnaces, Boilers and Hot Water Tanks
Oxygen (O2)	6% to 9%	6% to 9%	3% to 9%
Stack Temperature (□F)	325 □ to	350 □ to	90 □ to
Draft in Water Column Inches (WC")	-.02 WC" to -.04 WC" in the stack	-.02 WC" to -.04 WC" in the stack	PMI
Carbon Monoxide in Parts Per Million (ppm) Air Free	<50 ppm air free (Goal)	<50ppm air free	<50ppm air free or PMI
	>100ppm air free (Excessive)	>100ppm air free (Excessive)	>100ppm air free (Excessive)

Oil Fired Power Burners

Combustion Readings	Residential Furnaces, Boilers and Hot Water Tanks	Commercial Boilers
Oxygen (O2)	5% to 7%	4% to 6%
Stack Temperature (□F)	355 □ to 45	325 □ to 425
Draft in Water Column Inches (WC")	-.01 WC" Overfire or PMI*	-.01 WC" Overfire or PMI
Carbon Monoxide in Parts Per Million (ppm) Air Free	<50 ppm air free (Goal)	<100ppm air free (Goal)
	>100ppm air free (Excessive)	>200ppm air free (Excessive)
Smoke	Zero or PMI (Bacharach smoke number)	Zero or PMI (Bacharach smoke number)

Commercial Gas Fired Power Burners

Combustion Readings	Low Fire (Light Off)	High Fire
Oxygen (O2)	6% to 9%	3% to 6%
Stack Temperature (□F)	NA	325 □ to 400
Draft in Water Column Inches (WC")	-.01 WC" Overfire or PMI*	-.01 WC" Overfire or PMI
Carbon Monoxide in Parts Per Million (ppm) Air Free	<100ppm air free (Goal)	<100ppm air free (Goal)
	>300 - 400ppm air free (Excessive)	>200ppm air free (Excessive)

APPENDIX 3–B

INSPECTION AND TESTING PROCEDURES FOR ALL APPLIANCES NATURAL GAS OR LIQUID PETROLEUM

The following inspection procedures shall be performed on all gas fired furnaces, boilers, water heaters and space heaters. The goal of these measures is to reduce Carbon Monoxide (CO), stabilize flame, test safety controls, and increase efficiency.

1. Inspect the burners for dust, debris, misalignment, and other flame interference problems.

2. Clean, vacuum, and adjust as needed.

3. Look for soot, scorched wires, peeling paint, scorch marks, and other evidence of flame roll out.

4. Inspect the heat exchanger for cracks and leaks.

5. Assure that all 120-Volt wiring connections are enclosed in covered electrical boxes.

6. Clean the blower. If equipped with a belt driven blower motor, check the belt for cracks, splits, and adjust and lubricate as necessary.

7. Replace or clean the filter.

8. Clean and level thermostat, and check heat anticipator setting. The heat anticipator setting should match the measured current in the control circuit, or match the PMI setting on the data plate.

9. Determine if pilot is burning (if equipped), and that main burner ignition is satisfactory (replacing the thermocouple is optional).

10. Sample the undiluted combustion gases with a calibrated flue gas analyzer.

11. Adjust burner shutters (if equipped) and gas pressure to bring flue gases to acceptable levels.

12. Test pilot safety controls (for pilot systems) for complete gas valve shutoff when pilot is extinguished.

13. Check venting system for proper size and pitch, obstructions, blockages, and clearances to combustibles.

14. Check venting system for proper draft.

15. Test limit switches for proper operation. Record all information.

APPENDIX 3 - B 1

INSPECTION AND TESTING PROCEDURES FOR ELECTRIC FURNACES AND ELECTRIC HEAT PUMPS

The following inspection procedures shall be performed on all electric furnaces and Electric heat pumps. The goal of these measures is assure safe operation, test safety controls, and increase efficiency.

1. Check cooling temperature drop: Return air temp. minus supply air temp. = temperature drop.

2. Range should be within 18 to 21°F or per manufacturer's instructions.

3. Use refrigerant leak detector to inspect for thermal fluid leakage. If leakage detected, promptly contact an EPA certified technician to correct the problem.

4. Inspect main electrical power supply to the unit.

5. Determine if furnace, heat pump/AC unit has a dedicated circuit that is properly sized and fused.

6. Determine if operational disconnect switch is present.

7. Visually inspect all wiring at/in unit to detect charred, frayed, or missing wire insulation, and for improper or loose connections.

8. Assure that all 120/220 volt wiring connections are enclosed in covered electrical boxes.

9. Visually inspect indoor coil drain to determine if there is proper condensate drainage.

10. Visually inspect the A-coil for cracks and/or holes.

11. Visually inspect for dirty or obstructed fins, filters, and ducts.

12. Clean the blower. If equipped with a belt driven blower motor, check the belt for cracks, splits, and adjust and lubricate as necessary.

13. Replace or clean the filter.

14. Clean and level thermostat, and check heat anticipator setting. The heat anticipator setting should match the measured current in the control circuit, or match the PMI setting on the data plate. Record all information.

APPENDIX 3 – B 2

INSPECTION AND TESTING PROCEDURES FOR ALL APPLIANCES THAT BURN FUEL OIL

The following inspection procedures shall be performed on all gas fired furnaces, boilers, water heaters and space heaters. The goal of these measures is to reduce carbon monoxide, stabilize flame, test safety controls, and increase efficiency.

1. Visually check for fuel leakage in kerosene or fuel oil distribution lines. Visually check the fuel oil storage tank for leaks and in-line filter and shut off.

2. Inspect the burners for dust, debris, misalignment, and other flame interference problems.

3. Clean, vacuum, and adjust as needed.

4. Look for soot, scorched wires, peeling paint, scorch marks.

5. Inspect the heat exchanger and combustion chamber for cracks and leaks.

6. Assure that all 120-Volt wiring connections are enclosed in covered electrical boxes.

7. Clean the blower. If equipped with a belt driven blower motor, check the belt for cracks, splits, and adjust and lubricate as necessary.

8. Replace or clean the filter.

9. Clean and level thermostat, and check heat anticipator setting. The heat anticipator setting should match the measured current in the control circuit, or match the PMI setting on the data plate.

10. Determine if main burner ignition is satisfactory.

11. Perform smoke testing then sample the undiluted combustion gases with a calibrated flue gas analyzer.

12. Check venting system for proper type, size and pitch, obstructions, blockages, and clearances to combustibles.

13. Check venting system for proper draft and proper operation of barometric damper.

14. Test limit switches for proper operation.

15. Record all information.

APPENDIX 3 – B 3

INSPECTION AND TESTING PROCEDURES FOR SOLID FUEL FURNACES AND STOVES

The following inspection procedures shall be performed on all solid fuel furnaces and stoves. The goal of these measures is to reduce carbon monoxide and insure safe operation of the unit.

1. Insure unit is installed over a UL approved stove pad.

2. Heat exchanger/cabinet leakage or corrosion. To include visual check of door gasket or seal.

3. Unsafe and/or improper wiring, if applicable.

4. Look for soot, scorched wires, peeling paint, or scorch marks.

5. Clean the blower, if applicable. If unit has a belt driven blower motor, check the belt for cracks, splits, and adjust and lubricate as necessary

6. Check venting system for proper size and pitch, obstructions, blockages, and clearances to combustibles.

7. Ensure all clearances outlined in NFPA 211 for unit and vent pipe are achieved.

8. Record all information.

APPENDIX 3 - C

COOLING EQUIPMENT INSPECTION REQUIREMENTS

For both existing cooling equipment that is to be kept in service and newly installed cooling equipment, a thorough inspection **shall** be required, and **shall** address the following:

1. The system **shall** be inspected for refrigerant leaks. If leaks exist, they **shall** be repaired. The repairs and re-fills **shall** be performed by an EPA-certified technician.

2. The electrical wiring **shall** be inspected. If wiring is frayed, or if the wiring or equipment is loose, or improperly installed, or if the equipment is connected to an electrical circuit shared with other appliances, inadequately sized, or with improper over current protection, then the problems **shall** be corrected. Repairs to wiring, circuitry and over-current protection **shall** conform to the appropriate section of the NEC (NFPA 70A).

3. Clearances **shall** be checked and **shall** conform to the manufacturer's installation instructions and the RCO. If not, proper clearances **shall** be created.

4. Cooling fans **shall** be inspected to see if they are dirty or clogged, or in need of repair. If so, the necessary cleaning or repairs **shall** be performed by a qualified individual.

5. Condensate drain lines **shall** be inspected to see if they are obstructed, leaking or improperly installed? If so, the lines **shall** be repaired or replaced.

6. Control devices (e.g. blower motors, fans, filters, thermostats, etc.) **shall** be inspected to ensure that they are not missing, that they are functional, and that they are properly adjusted. If problems are found, the devices **shall** be repaired or replaced.

7. The amount of return air and supply air, on forced air systems, **shall** be adequate for the cooling load. An ACCA, manual D **shall** be performed, and the ducts altered or replaced to comply with these requirements and the requirements of the RRS 3.7.

APPENDIX 3 - D

WATER HEATER INSPECTION REQUIREMENTS

Existing water heaters that are in good condition **should not** be replaced. All existing water heaters to be left in place **shall** be inspected based upon the following (also see the requirements at RRS 3.8:

1. The tank **shall** be inspected to see if it is leaking or severely corroded. If so, the equipment **shall** be replaced.

2. An Inspection of the water lines coming into the tank **shall** be conducted. A cold water supply shut-off valve **shall** be present, functioning, and not leaking. If there are problems, a functioning shut-off valve **shall** be installed. The water supply line connections **shall** be inspected to ensure that they are not leaking or severely corroded. If so, the lines **shall** be repaired or replaced. Repairs and replacements of water supply lines **shall** conform to RRS Chapter 5. Dielectric Fittings **shall** be installed between water line connections of differing materials.

3. A clean and tune for all existing water heating equipment that **shall** be retained includes, at a minimum:

   a) Test/repair all gas leaks from the appliance manual shutoff valve to the appliance.

   b) Inspect and clean the combustion chamber, burner, fire tube, and baffle.

   c) Replace the thermocouple.

   d) Measure/improve draft pressure.

   e) Confirm/adjust outlet gas pressure.

   f) Measure carbon monoxide (CO) content (Max 100PPM).

   g) Set hot water temperature at 120-130° F. Be careful about setting water temperature too high, particularly with children, disabled or elderly persons occupying the house.

APPENDIX 3 – E

GUIDELINES FOR SIZING WATER HEATERSAND CALCULATING PAYBACK

This appendix is offered as a guide for selecting an appliance which will meet the needs of the household efficiently and economically. Two approaches are offered. The first approach is to simply use the CABO table below. The table provides recommended water heater storage capacity, BTU/hr input, draw and recovery rates based on the number of bathrooms and bedrooms present in the home.

Dwellings with 1 to 1 and 1/2 Bathrooms

Type of Fuel	Gas	Electric	Oil	Gas	Electric	Oil
Number of Bedrooms	2	2	2	3	3	3
Storage (gals)	30	30	30	30	40	30
Input (BTU/hr or kw)	36K	3.5	70K	36K	4.5	70K
Draw (gph)	60	44	89	60	58	89
Recovery (gph)	30	14	59	30	18	59

Dwellings with 2 to 2 and 1/2 Bathrooms

Type of Fuel	Gas	Electric	Oil	Gas	Electric	Oil
Number of Bedrooms	3	3	3	4	4	4
Storage (gals)	40	50	30	40	50	30
Input (BTU/hr or kw)	36K	5.5	70K	36K	5.5	70k
Draw (gph)	70	72	89	72	72	89
Recovery (gph)	30	22	59	32	22	59

The second approach is to use the procedure outlined in the GAMA Consumer's Directory of Certified Energy Ratings (GAMAnet.org). This approach is more exact in that it considers estimated water usage to determine the right "size" equipment. Also, it includes methodology for estimating and comparing the operating costs of equipment in order to select the most cost-effective appliance. Before completing the steps, there are several things that must be known:

1. The number of plumbing fixtures in the dwelling.

2. The number of occupants in the household and their general use patterns. This is critical in order to establish the time of day and the frequency that hot water is used. For example, when are baths or showers taken, clothes washed and dishes washed? The purpose of this is to establish the peak demand for the first hour of usage.

3. The Energy Factor (EF) of the models of water heaters being considered for installation. This information is available in the GAMA directory for those manufacturers participating in the certification program.

4. The cost to install the models of water heaters being considered.

STEP 1: Estimating Peak Hour Demand (Sizing the Water Heater)

a. Multiply the number of activities using hot water during the busiest hour of the day times the estimated average number of gallons used per activity. Some activities and estimated average usages are; bath/shower - 20 gals., shaving - 2 gals., hand/face washing - 4 gals., shampooing - 4 gals., hand dishwashing - 4 gals. and automatic clothes washing - 32 gals.

b. Add the estimated average usages for the first hour. The result is the household's peak first hour demand.

c. Select models of water heaters that have a peak first hour demand rating that is close (give or take 2 gals./hr) to the peak first hour demand for the household. This information is available in the GAMA directory.

STEP 2: Calculating Payback

a. Determine the water heater's estimated annual operating cost by using the chart provided in the GAMA directory. Find the chart for the appliance's fuel. Find the column for the appliance's EF. Find the row for the appropriate fuel cost. Follow the row across to the intersection of the EF column. The result is the appliance's estimated annual fuel operating cost. Repeat for each model to be considered.

b. Subtract the installation cost of the higher EF model from the installation cost of the lower EF model. This is the amount of additional costs required to buy and install the higher EF model.

c. Subtract the annual estimated operating cost of the higher EF model from the estimated annual operating cost of the lower EF model. This is the amount of money the higher EF model will save each year of operation over the lower EF model.

d. Divide the annual savings (from Step 2, c) into the additional costs (from Step 2, b). The result is the number of years before the savings generated by the higher EF model will off-set the increased cost of installing the higher EF model. After that time, the savings will accrue to the owner.

APPENDIX 4 - A

ELECTRIC RECEPTACLE AND FIXTURE LOCATION

REQUIREMENTS FOR ELECTRICAL UPGRADES

<u>INTERIOR LOCATIONS</u>:

Kitchens:

- All kitchen receptacles **should** be on a 3-wire grounded 20 amp circuit and **shall** be GFCI protected unless for a dedicated appliance on a dedicated circuit (see NEC).

- Receptacle outlets **shall** be installed every 48 inches at each kitchen wall counter space 12 inches or wider, and **shall** be installed so that no point along the counter line is more than 24 inches from a receptacle outlet in that space (see NEC).

- The kitchen **shall** have two dedicated 20 amp small appliance branch circuits that serve only the kitchen.

- The kitchen **shall** have a non-GFCI protected receptacle for the refrigerator which **should** be located directly behind the refrigerator.

- A permanently installed overhead lighting fixture controlled by a wall switch **shall** be required in the kitchen.

Bathrooms:

- The bathroom **shall** have at least one dedicated 20 amp receptacle outlet, which **shall** be GFCI protected, marked in the service panel, and **shall** be located at least thirty 30 inches and not more than 48 inches above the floor adjacent to the lavatory and not more than 3 feet of the outside edge of each basin and at least 12 inches from the outer rim of any bathtub or shower opening.

- A permanently mounted switch controlled ceiling or wall lighting fixture **shall** be present. Hanging fixtures or lighting tracks **shall not** be located over the tub unless they are over 8 feet above the tub or labeled for wet locations.

- Exhaust fans **shall** include a closure device that seals the duct when the fan is not operating. Ducts **shall** lead directly to the outside air (see ducting requirements noted in RRS Section 2.8.1).

- All bathrooms **shall** have an exhaust fan. Newly installed bathroom exhaust fans **shall** be able to move enough air for 8 air changes per hour. All replacement or new exhaust fans **shall** be a maximum of **2.5** sones. The fan **should** be installed in a manner that will encourage the occupants to use it and to leave it on long enough to be effective, for 20 minutes to an hour after showering. All exhaust fans **shall** be installed in compliance with the requirements at RRS 2.6.4.

Habitable Rooms (Bedrooms/Living Room/Dining Room/Family Room/Den/Parlor):

One of the following **shall** occur:

- In each family room, dining room, bedroom, living room, parlor, library, den, sunroom, recreation room or similar room or area, receptacle outlets **shall** be placed so that at a minimum each wall has no less than one receptacle; or

- The receptacles **shall** be spaced so that no point along the perimeter of the floor is more than 6 feet from a receptacle. Receptacles **should** be spaced equal distances apart.

- All existing non-grounded receptacles **shall** be replaced with new polarized non-grounding receptacles, or GFCI receptacles, or the circuit shall be GFCI protected in a two-wire system, and **shall** meet the requirements of RRS 4.6.2.

- ARC-Fault Circuit Interruption (AFCI) protection may be required in bedrooms depending on local code interpretation. Refer to the NEC which notes the requirements of installation in bedrooms. Local code **shall** be followed.

Laundry Rooms and Utility Areas:

- Every laundry room/utility area **shall** have a receptacle outlet. The washer **shall** have a dedicated (single outlet) receptacle on a separate dedicated 20 amp circuit labeled in panel box. See the requirements at RRS 4.4.1 and 4.6.5.

- The laundry room/utility area **shall** have a permanent lighting fixture controlled by a wall switch.

Closets and Pantries:

- Closet lights **should** be installed, and unsafe fixtures **shall** be removed.

- Only surface-mounted or recessed fluorescent fixtures, or recessed incandescent fixtures with enclosed lamps **shall** be installed in closets in the wall or ceiling no less than 6 inches away from any storage as required by the NEC.

Hallways:

- A receptacle **shall** be installed in hallways 10 feet or longer. A convenience receptacle **should** be installed in each hallway.

Attics and Crawlspaces:

- A permanent electric light fixture and outlet **shall** be installed near all heating equipment located in enclosed rooms, attics and crawl spaces to provide for maintenance needs. The light **shall** be controlled by a switch located at the passageway opening.

Unfinished Basements and Garages:

- Outlets installed in unfinished basements and or crawl spaces **shall** be GFCI protected (see NEC Article 210-8 (a) (4). Exception- a receptacle located in a dedicated space for an appliance, such as a washing machine or sump pump.

- Every basement **shall** have at least one switch controlled light fixture and one general purpose outlet.

- Every attached garage (and detached garages with power), **shall** have at least one GFCI protected receptacle outlet located at least 48 inches above floor.

Equipment:

- Furnaces and Air Conditioning equipment **should** have their own electrical disconnects which are within sight of and readily accessible from equipment for which it is intended and are of correct amperage and installed in accordance with all relevant NEC provisions.

- A permanent electrical receptacle and lighting fixture **shall** be provided near all heating appliances located in enclosed rooms, attics, basements and crawlspaces.

- Wiring for room air conditioners **shall** conform to the NEC.

- Electrical circuits for well pumps (jet pumps or submersible pumps), sump pumps, and septic aerators **shall** be on dedicated circuits labeled in the panel box in accordance with NEC requirements.

- Equipment, such as washing machines and ranges **shall** be grounded per the requirements of NEC.

EXTERIOR LOCATIONS:

- Exterior outlets **shall** be GFCI weather protected per the NEC. Each dwelling **should** have two weather protected GFCI receptacles installed, one located at the front and one located at the rear of the unit.

- A permanently installed light fixture controlled by a wall switch **shall** be located at each exterior door.

APPENDIX 5-A

GUIDELINES FOR SIZING PLUMBING SUPPLY LINES

Following is a simplified procedure for helping to determine the adequacy of existing water supply lines and in the sizing of new water supply lines. For this method to be reasonably accurate the water pressure at the main shut-off valve where the water comes into the building must be within the range specified in 5.2.4.1 (40-80 psi) and the elevation of the highest fixture above the service valve must be less than 25 feet.

For more detailed, accurate methodology or for systems outside the above parameters the following references might be useful: Practical Plumbing Engineering by Cyril M. Harris, and Do-It-Yourself Plumbing by Max Alth (see the bibliography for complete listings).

Other variables such as age of piping, number and type of fittings, and design of fixtures also affect the pressure. For this reason no formula or procedure can account for all variables and be fully relied upon to fit every situation, but must be augmented with actual field testing and experience. However, this procedure can serve as a basic guideline for proper sizing of water supply piping. Following are the steps in the process:

1. For each pipe interval, determine the fixture load that it carries using Table 5 – A1

   (For multiple fixtures use the guidelines set out below).

   A. Only count hose bibs at 50 percent when adding to the total load.

   B. When combining three or more fixtures (not fixture groups), multiply by .9.

   C. When combining one or more fixtures with a fixture group, multiply by .9.

   D. When combining two fixture groups multiply by .8.

   E. When combining three or more fixture groups or two or more fixture groups + one or more fixtures multiply by .7.

   F. Use fixture groups when possible.

TABLE 5-A1

Water Demand of Fixtures and Fixture Groups in Gallons Per Minute			
Fixture Type Or Group	Total	Hot	Cold
Lavatory Faucet	2	1.5	1.5
Bathtub Faucet Or Shower Head	5	4	3.5
Toilet Tank	3		3
Kitchen Sink	4	3	3
Dishwasher	4	4	
Laundry Tub	5	3.25	3.25
Washing Machine	5	3.5	4
Hose Bib	5		5
Kitchen Group (Sink and Dishwasher)	7	5.5	3*
Laundry Group (W. M. And L. Tub)	8	6	6.5
1/2 Bath Group (Lavatory and Toilet)	4.5	1.5*	4
Full Bath Group (Lav., Toilet, Tub/Sh.)	8	5.5	7
1 1/2 Bath Group	9.5	7	7.5
2 Bath Group	12	9.5	8.5
2 1/2 Bath Group	13	10	9
3 Bath Group	15	11.5	10

* Really a single fixture and not a fixture group.

2. Determine the type of piping that was or is to be used.

3. Using Table 5-A2 below, determine the size of the piping necessary to carry the amount of demand from the calculations above.

TABLE 5-A2

PIPE SIZING BASED ON VELOCITY LIMITATION

Flow of pipe in gallons per minute					
Nominal Pipe Size (Inches)	Copper Water Tube			CPVC or Polyethylene	Steel Pipe
	Type K	Type L	Type M		
1/2	5.4	5.8	6.3	7.6	7.6
3/4	10.9	12.1	12.9	13.3	13.3
1	19.4	20.6	21.8	21.5	21.5
1 1/4	30.3	31.3	32.6	37.3	37.3

1. Pipe sizing based on velocities of 8 feet per second to avoid excessive noise in system; shock damage to pipe, fittings, and equipment; and accelerated corrosion.

2. Actual flow also depends on the roughness of the pipe and the amount of mineral deposition inside the pipes, which will vary with the age of the pipe and the water quality, especially with galvanized pipe.

3. Flow rates are based on copper water tube which conforms to ASTM B 88.

4. Flow rates are based on chlorinated polyvinyl chloride pipe, schedule 40, which conforms to ASTM F 441.

5. Flow rates based on polyethylene pipe, schedule 40, which conforms to ASTM D 2447.

6. Flow rates based on galvanized steel pipe, schedule 40, which conforms to ASTM A 53.

APPENDIX 7-A

LEAD-BASED PAINT REQUIREMENTS AND GUIDANCE

Attachments/Exhibits:

Exemptions

1. Example of Computation of Rehabilitation Costs
2. Rehabilitation Costs Computation Worksheet
3. Terms and Conditions
4. Interim Lead Inspection Report
5. Notification of Evaluation
6. Notification of Presumption
7. Notification of Hazard Reduction
8. Lead-Based Paint Disclosure Form for Sellers
9. Lead-Based Paint Disclosure Form for Lessors
10. Resources

OCD REQUIRED LEAD DOCUMENTATION

1. Lead screening worksheet (if exempt, no further action required)
2. Cost computation
3. Risk assessment/notice of presumption
4. Lead safe/abatement specifications
5. Contractor occupant protection plan
6. Prior ODH abatement notification
7. Interim visits reports
8. If no interim visits, photos of lead safe set-up and containment in file
9. Clearance results
10. Copy of notice of hazard reduction, including clearance report

Link for Ohio Department of Health lead rules:

http://www.odh.ohio.gov/en/rules/final/3701-30-39/f3701-32.aspx

LEAD SAFE HOUSING REQUIREMENTS SCREENING WORKSHEET

This worksheet should be placed in the project file for any residential property that is assisted with Federal funds. Parts 1 and 2 should be completed for all projects.

Property Owner _____

Address: _____

Part 1: Exemptions from All Requirements of 24 CFR Part 35

If the answer to any of the following questions is yes, the property is exempt from the requirements of 24CFR Part 35. The regulatory citation of each exemption is cited as additional guidance.

Was the property constructed after January 1, 1978? [35.115(a)(1)] ? NO YES

Is this a zero-bedroom unit? (e.g. SRO, efficiency) [35.115(a)(2)] ? NO YES

Is this dedicated elderly 1 housing? (i.e. over age 62) [35.115(a)(3)] ? NO YES

Is this housing dedicated for the disabled 2? [35.115(a)(3)] ? NO YES

Has a paint inspection been conducted in accordance with 35.1320(a) established that the property is free of lead-based paint? [35.115(a)(4)] ? NO YES

The date of the original paint inspection was_____ . An optional paint inspection conducted on _____confirmed this prior finding.

Has all lead-based paint in the property been identified and removed, and has clearance been achieved as cited below? [35.115(a)(5)] ? NO YES

Clearance was achieved prior to September 15, 2000, and the work was done in accordance with 40CFR Part 745.227(b). NO YES

Clearance was achieved after September 15, 2000, and the work was done in accordance with 24CFR Part 35.1320, 1325 and 1340. NO YES

Will a currently vacant unit remain vacant until it is demolished? [35.115(a)(6)] NO YES

Is the property used for non-residential purposes? 3 [35.115(a)(7)] ? NO YES

Will any rehab **exclude** disturbing painted surfaces? [35.115(a)(8)] ? NO YES

Are emergency actions immediately necessary to safeguard against imminent danger to human life, health or safety, or, to protect the property from further structural damage (e.g. after natural disaster or fire) [35.115(a)(9)] ? NO YES

Will the unit be occupied for less than 100 days under emergency leasing assistance to an eligible household? 4 [35.115(a)(11)] NO YES

Part 2: Limited Exemptions from Specific Hazard Reduction Requirements he HUD Final Rule allows for limited exemptions from specific requirements due to the characteristics of the rehabilitation work, the structure or the occupants. If the answer to any of the following questions is yes, the grantee and/or occupant may waive certain requirements as described below. Is the amount of painted surface that is being disturbed below “de minimis” levels, as defined below? If so, safe work practices and clearance are not required in that work area.

Less than 20 square feet on an exterior surface [35.1350(d)(1)] NO YES

Less than 2 square feet in any single interior room [35.1350(d)(2)] NO YES

Less than 10% of surface area of an interior/exterior component [35.1350(d)(3)] NO YES

Is the unit occupied by an elderly person(s)? If so, relocation of the elderly occupant(s) is not required if complete disclosure of the nature of the work is provided and informed consent is obtained prior to rehabilitation.5 NO YES

Is a unit that is subject to abatement requirements listed or eligible for listing on the National Register of Historic Places, or does it contribute to a National Register Historic District? If so, the State Historic Preservation Office may request that interim controls be implemented rather than abatement. On-going maintenance and reevaluation is required. [35.115(13)]NO YES

I have evaluated the site and property, the work specifications, and interviewed the occupants. In my professional opinion, this unit qualifies for the indicated exemption(s).

_____

Signature Date

1 Defined as retirement communities or similar types of housing reserved for households composed of one or more persons over age 62, or other age if recognized by a specific Federal housing assistance program. However, if a child under age 6 resides or is expected to reside in such a unit, the unit is not exempt.

2 The housing must be a residential property designated exclusively for persons with disabilities, defined as any person who has a physical or mental impairment that substantially limits one or more major life activities, has a record of impairment, or is regarded by others as having such an impairment. However, if a child under age 6 resides or is expected to reside in such a unit, the unit is not exempt.

3 Except that spaces such as entryways, hallways, stairways, etc. serving both residential and non-residential uses in a mixed-use property are not exempt.

4 When a household is provided short-term emergency leasing assistance and will occupy a unit for less than 100 days, the unit is exempt from lead paint regulations. This emergency leasing exemption is attached to the unit, not the family, and is a one-time exemption. After being assisted for a total of 100 consecutive days, the unit becomes subject to regular Subpart K requirements. Multiple families cannot be cycled through the same unit at intervals of less than 100 days under this exemption.

Example of Computation of Rehabilitation Costs

Item	Rehab Cost Estimate	Based on Section 35.915: Rehab Assistance Amount	Based on Section 35.915: Excluded Lead Hazard Reduction Costs
Roof	$4,500	$4,500	
Replace 10 windows	$4,000	$4,000	
Replace Kitchen floor/subfloor	$1,500	$1,500	
Replace Front Steps and Walk	$1,500	$1,500	
Repair foundation wall	$1,200	$1,200	
Plumbing	$3,500	$3,500	
Electric	$2,500	$2,500	
HVAC	$2,800	$2,800	
Risk Assessment	$1,200		$1,200
Interim Controls	$8,000		$8,000
Covering Furniture	$500		$500
Cleaning	$500		$500
Clearance Examination	$500		$500
Relocation (14 days @ $150/day)	$2,100		$2,100
Total Rehab Project Cost =	$34,300	$21,500	$12,800

Why isn't this a lead-hazard reduction cost? Because the windows are being replaced (in a lead-safe manner) based on the rehab inspection, which determined that they were defective, not weather-tight, and repair would not be cost-effective. The work would still have to be done by lead-safe renovators using safe work practices. However, if the only basis for removal is that they were identified as a lead hazard in a Risk Assessment, it would mean they are being replaced because the intent was to address a lead hazard, which then classifies them as abatement items, and a licensed abatement contractor would need to do the removal (per HUD-EPA 4/19/01 letter). EPA regulations define the removal of components to mitigate lead hazards as abatement - the intent here is rehabilitation.

Interim Control Measures:

Stabilize paint on 12 interior doors, and rehang to prevent abrasion

Plane kitchen cabinet doors drawers at impact points, paint, install felt bumpers, and rehang / reinstall.

Stabilize paint on baseboards in living room, hall, and 4 bedrooms and repaint

Remove carpeting in living room and children's bedrooms.

Clean carpet in other bedrooms

Repair damaged substrate in bathoom, and repaint surface.

Cover stair risers with luan mahogany and paint

Cover bare soil area in rear yard

Clean horizontal surfaces with a HEPA vacuum

Cover window sill in childrens bedrooms to prevent chewing of painted surface

Example

Rehabilitation Cost Computation Worksheet

Project Address:_____

Fill in the information requested in the form below. The amount on line "E" is the figure to be used to determine rehabilitation costs. This data may need to be updated when project costs are definite.

A. Total Project Hard Cost: $_____

(-)

B. Non-federal amount: $_____

(=)

C. Federal Project Cost: $_____

(-)

D. Minus Cost of Lead Hazard Mitigation and Related Costs: $_____

(=)

E. Total Housing Rehabilitation Hard Costs $_____

(_____) Abatement (_____) Lead Safe

Example

Terms and Conditions

Personal Belongings must be put away in drawer or box or other container to keep them dust free during rehabilitation. Any items you will need while the rehabilitation work is in process should be taken with you.

Occupants will not have access to unit or particular areas of the dwelling unit, personal belongings or furniture during rehabilitation while lead hazards are being addressed.

Owner-occupants must make arrangements for arranging and paying for alternative housing during the rehabilitation and hazard mitigation work, unless otherwise provided by the program. In some cases the work may be done while the occupants reside in designated areas of the unit free from dust, if this is necessary, but in many cases this may not be possible.

Owners of rental property can temporarily relocated tenants to a suitable alternative dwelling, but the relocation costs will need to be paid by the owner. A relocation plan will be developed in conjunction with the housing program staff prior to the project and communicated to the tenants by the owner.

Once lead-based paint or hazards are identified in the unit, the owner will be required to disclose this information upon sale or rental of the unit, according to the forms provided.

Interim Control measures will be applied to eliminate or reduce lead dust to safe levels, but some lead will remain in your house. Intact lead surfaces are not a hazard. You will be provided with a report as to where the lead has been identified. It is your responsibility to monitor those surfaces and maintain them so lead hazards do not reoccur. Any surface with lead-based paint that is damaged or substantially disrupted should be repaired by a trained Lead-Safe Renovator.

I have received, read and understand these terms and conditions and the EPA Pamphlet "Protect Your Family From Lead in Your Home".

Signed:_____ Date:_____

_____ Date:_____

Interim Lead Inspection Report

Type of inspection: Lead work in progress

Home Owner: _____ Date of Inspection: _____

Address: _____

The following items were observed during my site visit, check (X) if yes.

Example

- ☐ Qualified Lead Safe supervisor on the job site or;
- ☐ Licensed Lead Workers on job site
- ☐ Signs posted
- ☐ Protected sheeting on floor, as required
- ☐ Containment Procedures (barriers to contain dust, windows closed, furnace ducts covered, etc.)
- ☐ Restricted Access
- ☐ Furnishing removed/covered in work area
- ☐ Mist water sprayer
- ☐ Worker safety (safe work practices)
- ☐ No Prohibited methods (no machine or dry sanding or grinding, sandblasting, heat gun above 1,000deg., paint stripping in poorly ventilated area, etc.).
- ☐ Handling and removal of debris
- ☐ Specialized cleaning: (cleaning and using HEPA vacuum)

Follow up Required: YES / NO

Comments:_____
_____
_____
_____
_____
_____

Contractor's Signature: _____

Date_____Rehab Inspector: _____

Owner Name

Address

City, State, ZIP

Example

Subject: Notification of Evaluation

Recently you applied for housing rehabilitation assistance for your residential property located at _____. Regulations governing our program require that we inspect residential properties for the presence of lead-based paint. The property, including the dwelling unit, the surrounding land, outbuildings, fences, and play equipment affixed to the land has been inspected for lead-based paint. The inspection has determined that:

____ The property does contain lead-based paint

____ Some of the surfaces that contain lead-based paint are considered hazardous

This notice is being provided to you as required by program regulations to inform you that this inspection has taken place. Our program staff will set up a meeting with you soon to review the results of the inspection report, and to discuss the next steps in processing your request for housing rehabilitation assistance, including addressing the lead-based paint hazards that have been identified by the inspection.

You do not need to take any action at this time. Do not attempt to make any repairs yourself or disturb any painted surfaces, as this could actually create hazards or worsen existing hazards. If hazards have been identified and if you have children under six years of age, you can help lower lead dust levels by wiping down window sills and mopping floor areas by windows where children might play, regularly wiping dust from toys or other objects that the child might place in its mouth, and seeing that the child's hands are washed frequently.

For more information on this notice or to obtain a copy of the actual evaluation, you may write _____at _____, or call _____.

Sincerely,

Owner Name

Example

Address

City, State, ZIP

Subject: Notification of Presumption

Recently you applied for housing rehabilitation assistance for your residential property located at _____. Regulations governing our program require that we inspect residential properties for the presence of lead-based paint or presume that lead-based paint is present. If a presumption is made rather than an inspection, then all surfaces will need to be treated as if they contained lead-based paint. In some cases, this may involve more extensive work being performed than if an inspection and risk assessment had been performed. After visiting the property and discussing the matter with you, our inspector has determined that a presumption of lead based paint is appropriate for this property for the following reasons:

____ The property is in relatively good condition and was built after 1960

____ The property has already undergone significant alterations, which have reduce the number of possible impact and friction surfaces that create lead-based paint hazards.

Therefore, this notice is being provided as required by program regulations to inform you that the property, including the dwelling unit, the surrounding land, outbuildings, fences, and play equipment affixed to the land is presumed to contain lead-based paint. Our program staff will set up a meeting with you soon to discuss the next steps in processing your request for housing rehabilitation assistance, including addressing the presumed lead-based paint hazards.

You do not need to take any action at this time. Do not attempt to make any repairs yourself or disturb any painted surfaces, as this could actually create hazards or worsen existing hazards. If hazards have been identified and if you have children under six years of age, you can help lower lead dust levels by wiping down window sills and mopping floor areas by windows where children might play, regularly wiping dust from toys or other objects that the child might place in its mouth, and seeing that the child's hands are washed frequently.

For more information on this notice or to obtain a copy of the actual evaluation, you may write _____at _____, or call _____.

Sincerely,

Ohio law(section 5302.30 of the Revised Code) requires every person who intends to transfer any residential real property by sale, land installment contract, lease with option to purchase, exchange, or lease for a term of 99 years and renewable forever, to complete and provide a copy to the prospective transferee of the applicable property disclosure forms, disclosing known hazardous conditions of the property, including lead-based paint hazards.

Federal law (24 CFR part 35 and 40 CFR part 745) requires sellers and lessors of residential units constructed prior to 1978, except housing for the elderly or persons with disabilities (unless any child who is less than 6 years of age resides or is expected to reside in such housing) or any zero-bedroom dwelling to disclose and provide a copy of this report to new purchasers or lessees before they become obligated under a lease or sales contract. Property owners and sellers are also required to distribute an educational pamphlet approved by the United States Environmental Protection Agency and include standard warning language in or attached to lease contracts or sales contracts to ensure that parents have the information they need to protect children from lead-based paint hazards.

Owner Name_____

Address_____

City, State, ZIP_____

Subject: Notification of Hazard Reduction Activity

The federal regulations of the U.S. Department of Housing and Urban Development (HUD) require that a notice be provided to occupants within 15 day of the completion of hazard reduction activities have been completed. This notice includes the following elements:

1. <u>Summary of the nature, scope of the hazard reduction activities</u>

   Lead hazard controls were applied in conjunction with housing rehabilitation activities to the property located at _____ . This work was performed by _____

   _____and included the following Interim Control measures:

   __ All physical defects in the substrate of a painted surface or component were repaired so the surface could be treated.

   __ Loose paint and other loose material was removed from the surface to be treated.

   __ Paint stabilization, including the application of a new protective coating or paint was applied to defective surfaces.

   __ Friction and impact surfaces were treated to prevent abrasion, which can create lead dust.

   __ Chewable surfaces (where evidence shows that a child less than 6 has chewed on the painted surface) were made inaccessible.

   __ Dust lead-hazard controls were applied, including a thorough cleaning of all horizontal surfaces, and porous surfaces were covered with a smooth covering or an appropriate material.

__ Soil lead hazards were addressed by the application of impermanent surfaces or land use controls.

2. A copy of the clearance report for the hazard reduction activities

3. Information on the location of lead-based paint in the rooms or areas where hazard reduction activities were conducted on a surface-by-surface basis.

4. Contact information for the contractor is provided below, and contact information is also listed for the program that provided inspection and oversight of the hazard reduction activities.

Contractor: Name:_____

Address:_____

City: _____State:_____Zip:_____

Phone:_____

Program Staff: Name: _____

Address:_____

City: _____State:_____ Zip:_____

Phone:_____

Ohio Department of Health

Clearance Examination Report

As Required by Ohio Administrative Code 3701-32

Ohio law(section 5302.30 of the Revised Code) requires every person who intends to transfer any residential real property by sale, land installment contract, lease with option to purchase, exchange, or lease for a term of 99 years and renewable forever, to complete and provide a copy to the prospective transferee of the applicable property disclosure forms, disclosing known hazardous conditions of the property, including lease-based paint hazards.

Federal law (24 CFR part 35 and 40 CFR part 745) requires sellers and lessors of residential units constructed prior to 1978, except housing for the elderly or persons with disabilities (unless any child who is less than 6 years of age resides or is expected to reside in such housing) or any zero-bedroom dwelling to disclose and provide a copy of this report to new purchasers or lessees before they become obligated under a lease or sales contract. Property owners and sellers are also required to distribute an educational pamphlet approved by the United States Environmental Protection Agency and include standard warning language in or attached to lease contracts or sales contracts to ensure that parents have the information they need to protect children from lead-based paint hazards.

Building owner name		Type of building ☐ Residence ☐ Child daycare facility ☐ School ☐ Other.....	
Building Address	City	State OHIO	Zip
Contact person/Manager/Principal (if other than owner)			Telephone
Name of Lead Abatement Contractor, Lead Abatement Project Designer, Lead-Safe Renovator, or Essential Maintenance Practice Worker		License number (if applicable)	License expiration date
Employer street address	City	State	Zip
Employer			Employer telephone
Name of Risk Assessor/Inspector/Clearance Technician who performed testing		License number	License expiration date
Employer street address	City	State	Zip
Employer			Employer telephone

Activity conducted requiring clearance examination (Please check appropriate boxes.) ☐ Lead abatement ☐ Lead-safe renovation ☐ Lead Hazard Control Order ☐ Interim controls ☐ Essential maintenance practices ☐ Paint stabilization	Dates of Lead Hazard Control or other activity performed Start date / Completion date
Check each clearance activity performed and attach appropriate form(s): ☐ Visual assessment ☐ Dust sample collection ☐ Soil sample collection ☐ Water sample collection	Date of Clearance Examination ☐ Passed Clearance examination ☐ Failed Clearance examination ☐ Repeat Clearance examination

This form is accompanied by the following required information

☐ Description of the lead hazard work performed ☐ Diagram of the floor plan with sample locations

☐ Laboratory results/reports ☐ Visual Assessment form

For a clearance examination following lead abatement on a property under a Lead Hazard Control Order issued under rule 3701-30-09 of the Administrative Code, were all lead hazards identified in the Lead Hazard Control Order sufficiently eliminated or controlled, based on comparison of the Lead Hazard Control Order with the work performed? ☐ Yes ☐ No (if no, attach an explanation) ☐ Not Applicable

Clearance Examiner signature	Date

Ohio Department of Health

Lead Hazard Control Visual Clearance

Clearance date		Page of

Name of Clearance Examiner	License number	License expiration date
Name of property owner/manager	Property owner/manager phone	

Property address	City	State	Zip
Lead hazard control start date	Date/time final cleanup completed		
Name of Contractor, Project Designer, Lead Safe Renovator or Essential Maintenance worker	Telephone		
Address	City	State	Zip

☐ Passed Visual Clearance Examination ☐ Failed Visual Clearance Examination ☐ Repeat Visual Clearance Examination

Room Identifier	List of building components to be treated and method of control in each room	Work on each component completed?		Visible paint chips seen?		Visible settled dust seen?		Additional work required?	
		☐ Yes	☐ No	☐ Yes	☐ No	☐ Yes	☐ No	☐ Yes	☐ No
		☐ Yes	☐ No	☐ Yes	☐ No	☐ Yes	☐ No	☐ Yes	☐ No
		☐ Yes	☐ No	☐ Yes	☐ No	☐ Yes	☐ No	☐ Yes	☐ No
		☐ Yes	☐ No	☐ Yes	☐ No	☐ Yes	☐ No	☐ Yes	☐ No
		☐ Yes	☐ No	☐ Yes	☐ No	☐ Yes	☐ No	☐ Yes	☐ No
		☐ Yes	☐ No	☐ Yes	☐ No	☐ Yes	☐ No	☐ Yes	☐ No
		☐ Yes	☐ No	☐ Yes	☐ No	☐ Yes	☐ No	☐ Yes	☐ No
		☐ Yes	☐ No	☐ Yes	☐ No	☐ Yes	☐ No	☐ Yes	☐ No
		☐ Yes	☐ No	☐ Yes	☐ No	☐ Yes	☐ No	☐ Yes	☐ No
		☐ Yes	☐ No	☐ Yes	☐ No	☐ Yes	☐ No	☐ Yes	☐ No
		☐ Yes	☐ No	☐ Yes	☐ No	☐ Yes	☐ No	☐ Yes	☐ No

Exterior soil	☐ Treated	☐ Not treated (provide explanation if not treated)
If treated, is bare soil present?	☐ Yes	☐ No
Was contaminated soil removed?	☐ Yes	☐ No
Is additional soil treatment required?	☐ Yes	☐ No

Notes:

Clearance Examiner signature

HEA 7731 (8/13)

Lead Hazard Control Visual Clearance continued

Clearance date		Page	of

Property address	City	State	ZIP

Room Identifier	List of building components to be treated and method of control in each room	Work on each component completed?		Visible paint chips seen?		Visible settled dust seen?		Additional work required?	
		☐ Yes	☐ No	☐ Yes	☐ No	☐ Yes	☐ No	☐ Yes	☐ No
		☐ Yes	☐ No	☐ Yes	☐ No	☐ Yes	☐ No	☐ Yes	☐ No
		☐ Yes	☐ No	☐ Yes	☐ No	☐ Yes	☐ No	☐ Yes	☐ No
		☐ Yes	☐ No	☐ Yes	☐ No	☐ Yes	☐ No	☐ Yes	☐ No
		☐ Yes	☐ No	☐ Yes	☐ No	☐ Yes	☐ No	☐ Yes	☐ No
		☐ Yes	☐ No	☐ Yes	☐ No	☐ Yes	☐ No	☐ Yes	☐ No
		☐ Yes	☐ No	☐ Yes	☐ No	☐ Yes	☐ No	☐ Yes	☐ No
		☐ Yes	☐ No	☐ Yes	☐ No	☐ Yes	☐ No	☐ Yes	☐ No
		☐ Yes	☐ No	☐ Yes	☐ No	☐ Yes	☐ No	☐ Yes	☐ No
		☐ Yes	☐ No	☐ Yes	☐ No	☐ Yes	☐ No	☐ Yes	☐ No
		☐ Yes	☐ No	☐ Yes	☐ No	☐ Yes	☐ No	☐ Yes	☐ No
		☐ Yes	☐ No	☐ Yes	☐ No	☐ Yes	☐ No	☐ Yes	☐ No
		☐ Yes	☐ No	☐ Yes	☐ No	☐ Yes	☐ No	☐ Yes	☐ No
		☐ Yes	☐ No	☐ Yes	☐ No	☐ Yes	☐ No	☐ Yes	☐ No
		☐ Yes	☐ No	☐ Yes	☐ No	☐ Yes	☐ No	☐ Yes	☐ No
		☐ Yes	☐ No	☐ Yes	☐ No	☐ Yes	☐ No	☐ Yes	☐ No
		☐ Yes	☐ No	☐ Yes	☐ No	☐ Yes	☐ No	☐ Yes	☐ No
		☐ Yes	☐ No	☐ Yes	☐ No	☐ Yes	☐ No	☐ Yes	☐ No
		☐ Yes	☐ No	☐ Yes	☐ No	☐ Yes	☐ No	☐ Yes	☐ No
		☐ Yes	☐ No	☐ Yes	☐ No	☐ Yes	☐ No	☐ Yes	☐ No
		☐ Yes	☐ No	☐ Yes	☐ No	☐ Yes	☐ No	☐ Yes	☐ No
		☐ Yes	☐ No	☐ Yes	☐ No	☐ Yes	☐ No	☐ Yes	☐ No
		☐ Yes	☐ No	☐ Yes	☐ No	☐ Yes	☐ No	☐ Yes	☐ No
		☐ Yes	☐ No	☐ Yes	☐ No	☐ Yes	☐ No	☐ Yes	☐ No

APPENDIX 7-B

CONTRACTOR OCCUPANT PROTECTION PLAN/RISK ANALYSIS

Occupation Protection Plan shall include the following items for approval by licensed lead risk assessor, rehab specialist, and home owner. A copy of this plan will be kept in project file.

1. Listing of children under the age of six by name and age.

2. Blood testing date and results, if testing performed on above listed children.

3. Itemization of lead work required and identified as interim control or abatement, whole house or limited area. Itemization list should be in schedule form with estimated time in each area.

4. Determination by contractor if relocation is a requirement. If required, list period of time estimated to complete work and obtain clearance.

5. Determination if program will provide assistance with relocation. It will have to be decided on a unit-by unit basis what will work for relocation. Because the housing rehabilitation program is voluntary, the program can require that homeowners with sufficient resources or with willing family or close friends in the area that have adequate accommodations during the rehabilitation and lead hazard mitigation work.

6. Upon completion of work, plan will be signed and dated by contractor, rehab specialist, lead risk assessor, and homeowner as well as attached copy of lead clearance report.

Contractor Occupant Protection Plan/Risk Analysis

Determination of interim inspections required is based upon the scope and length of time estimated to complete LBP hazard control work. OHCP requires a minimum of one interim inspection to be completed weekly based upon the estimated time frame for completion/clearance listed below.

Contractor Name: _____

Project Site Address: _____

_____

Listing of all children less than six (6) years of age:
(Include Lead Blood Level Testing Results if tested within past six (6) months

Name	Age	Results
_____	_____	_____
_____	_____	_____
_____	_____	_____
_____	_____	_____
_____	_____	_____
_____	_____	_____

Itemization of Lead Work Required: (By specification Number)

Interim Control Measures

_____
_____
_____
_____
_____
_____
_____

Lead Abatement Measures: (By specification Number)

_____
_____
_____
_____
_____
_____
_____

Estimated time frame for completion /clearance of LBP measures:

Interim Controls _____

Abatement _____

Is Relocation Required? Yes No

If Yes, does home owner have means to be responsible for relocation?

Yes No

If No, describe plan for relocation, including funding sources and limits.

_____
_____
_____
_____
_____
_____

The general contractor shall ensure that all lead hazard control work is performed by qualified individuals and that all work is performed in a lead safe manner.

I have read, understand, and approve of the above listed plan:

Contractor: _____

Lead Risk Assessor: _____

Home Owner: _____

Rehab Specialist: _____

APPENDIX A

SUMMARY OF INSPECTION AND TESTING REQUIREMENTS

This appendix lists eight specialized, but routine, inspections and tests that the RRS requires. This list is provided as a reference and it is not intended to outline all of the inspections which may be needed to thoroughly assess a rehabilitation project.

1. Wood-boring Insect Infestation and Damage

   Each building shall be inspected for evidence of wood-boring insect infestation and damage.

2. Well Water Quality

   If potable water is supplied by a private well located on the premises, the quality of the water must be tested by the local health department or other qualified source. At a minimum, the test must determine if the bacterial content of the water is within safe limits.

3. Private Septic System

   If sewage is treated by a private septic system located on the premises, the septic system must be inspected by the local health department or other qualified source. The inspection must determine if the system is adequate, functional and properly treating the discharged waste.

4. Plumbing System

   The plumbing system (including the water supply lines and the drain, waste and vent lines) shall be inspected for evidence of leaks, hazardous conditions, improper materials, improper installations, inadequate service and other existing or incipient conditions needing repair or improvement. The inspection must also assess the condition and adequacy of the plumbing fixtures and plumbing appliances.

5. Electrical System

   The electrical system (including the exterior service, service entrance, service panel and premises wiring) shall be inspected for evidence of hazardous conditions, improper materials, improper installations, inadequate service and other existing or incipient conditions needing repair or improvement. The inspection must include a load calculation and determine the number of circuits required.

6. Space Heating Equipment – Gas Cooking Appliances

   The space equipment, including the fuel/power source, the venting system and the heat distribution system, shall be inspected for evidence of hazardous conditions, improper materials, and improper installations and other conditions or problems needing repair or improvement. If fuel-fired equipment is not to be replaced, the inspection must include

flue gas measurement and stack temperature tests to determine combustion safety and efficiency. Flue gas analysis shall be performed on all new gas-fired and oil-fired units installed per Appendix 3-B, and Appendix 3-B2 (fuel oil fired appliances). If the equipment is to be replaced, the inspection must include a heat load calculation to size the new equipment.

7. Water Heating Equipment

The water heating equipment, including the venting system, shall be inspected for evidence of hazardous conditions, improper materials and installations and other conditions or problems needing repair or improvement. If equipment is to be replaced, the inspection must include a calculation to size the new equipment. The inspection must include flue gas measurement and stack temperature tests to determine combustion safety, draft, and efficiency per Appendix 3-D.

8. Fuel-Gas Piping

If fuel-gas (i.e. natural gas or LPG) is used, the lines shall be inspected for evidence of hazardous conditions, improper materials and installations. Also, the lines shall be tested for leaks using a combustible gas leak detector. Fuel oil supply lines shall also be inspected for leakage.

9. Air Conditioning

For both existing cooling equipment that is to be kept in service and newly installed cooling equipment, a thorough inspection **shall** be required per Appendix 3-C.

APPENDIX B

ABBREVIATIONS

ACCA	Air Conditioning Contractors of America
ANSI	American National Standards Institute
ASHRAE	American Society of Heating, Refrigeration & Air Conditioning Engineers
ASSE	American Society of Safety Engineers
ASTM	American Society for Testing and Materials
BOCA NPMC	Building Officials & Code Administrators of America, National Property Maintenance Code
CABO	Council of American Building Officials, One and Two Family Dwelling Code
CABO MEC	Council of American Building Officials, Model Energy Code
CSA	Canadian Standard Approval
EPA	Environmental Protection Agency (includes federal and state agencies)
FEMA	Federal Emergency Management Agency
GAMA	Gas Appliance Manufacturers Association
HUD	U.S. Department of Housing and Urban Development
NFPA	National Fire Protection Association
ODH	Ohio Department of Health
OCD	Office of Community Development
OHPO	Ohio Historic Preservation Office
OPC	Ohio Plumbing Code
OSHA	Occupational Safety & Health Administration
RCO	Residential Code of Ohio
UFAS	Uniform Federal Accessibility Standards
UL	Underwriter's Laboratory

APPENDIX C

DEFINITIONS

Attic	That portion of a building which is between the roof and the ceiling of the top floor. In 1 1/2 story buildings, the attic includes the area behind the knee wall.
Basement	That portion of a building which is partly or completely below grade. Basements are enclosed by the foundation walls and may be habitable or inhabitable. In general, basements have sufficient headroom to enter and move about.
Bathroom	A room containing plumbing fixtures including a bathtub, shower or combination bathtub/shower. In most single-family residential dwellings, the bathroom will also contain a toilet (water closet) and a lavatory. However, in the context of the RRS, a room containing a toilet and a lavatory (i.e. a “toilet room”) shall also be considered a bathroom.
Bedroom	A room designated for sleeping. In most single-family residential dwellings, bedrooms are separate rooms used exclusively for sleeping. However, in the context of the RRS, other habitable rooms (e.g. living room, dining room, parlor, den, etc.) which are used for sleeping shall be considered bedrooms.
Blower Door	A calibrated device consisting of a high velocity fan, pressure sensitive gauges and a simple computer used to pressurize (or de-pressurize) a dwelling and therefore quantify and locate air movement.
Building	The structure containing the dwelling or dwellings and the common areas within the structure.
Building Shell	The building’s wall, ceiling and floor assemblies that make up the exterior boundaries. Regarding energy efficiency measures, the building shell refers to the boundaries between the conditioned and unconditioned spaces (i.e. thermal boundaries).
Cellar	A basement space which is unfinished and uninhabitable. In many cases, cellars have dirt, stone or brick floors.
Combustion Equipment	Equipment or appliances that produce heat by the on-site burning of gaseous, liquid or solid fuel. Examples of combustion equipment include; furnaces, space heaters, fireplaces, water heaters, ranges, cook top stoves and clothes dryers. Combustion equipment may also be referred to as fuel-burning equipment.

Conditioned	Those portions of a building in which the air is heated (or cooled) to maintain comfort for the occupant and/or to protect the building's systems, such as protecting water lines from freezing. In the context of the RRS, conditioned spaces are generally spaces which are intentionally heated (or cooled) and therefore are within the building's thermal boundary. Spaces which are unintentionally conditioned, such as a furnace room or a basement with ducts running through it, shall be considered unconditioned.
Crawlspace	The space between the floor of the building and the grade below. Crawlspaces may be enclosed by the foundation walls or open the outside.
Direct-Vent Equipment	High energy efficient space and water heating equipment that, with the aid of draft inducing fans, receive combustion air directly from the outside, burn fuel within a sealed combustion chamber and vent combustion by-products horizontally through the sidewall.
Dwelling or Dwelling Unit	A single unit providing complete independent living facilities for one or more persons including permanent provisions for living, sleeping, eating, cooking and sanitation.
Electrical System	In the context of the RRS, the electrical system shall include all components of the dwelling and premises wiring system, from the load end of the service drop (or underground lateral) to the receptacle or fixture. This includes the service entrance, the service panel and over-current protection devices, the wiring circuitry and the fixtures.
Functional	In the context of the RRS, functional means that a thing operates or fulfills the purpose for which it was designed and intended. Functional implies that the thing is in good repair and works without problems.
Fuel-Burning Equipment	See "combustion equipment". Generally refers to furnaces and water heaters.
Habitable Space	Space within a dwelling designated for living, sleeping, eating or cooking. Bathrooms, toilet rooms, closets, storage or utility rooms, halls, and similar spaces are not considered habitable spaces.
Heating Distribution System	The ducts or piping which conduct the heated air or fluid from the heating equipment to the space and back to the heating equipment. Warm-air distribution systems include the plenum, supply and return ducts, connectors, the fan and air handler components, registers and dampers. Hydronic distribution systems include supply and return piping, connectors, pumps, valves, expansion tanks and radiators.

Heating Equipment In the context of the RRS, heating equipment refers to appliances designed and used exclusively for heating the space within the dwelling. Examples include furnaces, space heaters, boilers and baseboard heaters. Heating equipment may be fuel-burning or electric and stationary or portable. Other appliances that produce heat, but are not designed for space heating, such as kitchen ranges and cook top stoves, are not considered heating equipment.

Hydronic System Hot water or steam heating equipment and distribution system.

Kitchen A room designated for preparing food. In most single-family residences, a kitchen is a separate room or distinct part of a room used exclusively for cooking. In the context of the RRS, a kitchen must have adequate space for a cooking appliance and a refrigerator, a sink and adequate storage and counter top space.

Knee wall A short stud wall connecting the floor and the roof framing members which separates a room from an attic area.

Occupiable Space Space within a dwelling other than that designated for living, sleeping, eating or cooking. Occupiable spaces include areas such as bathrooms, toilet rooms, closets, halls, storage and utility rooms.

Primary Heating Equipment Heating equipment used as the main source for space heating. Generally, primary heating equipment is permanent and stationary. Portable space heaters are generally secondary heat sources used as back up or in emergencies.

Plumbing System In the context of the RRS, the plumbing system shall include all components of the water supply and sanitary disposal system in the dwelling unit and on the premises. The water supply system includes the supply (if a well is present), supply piping, connectors, water heater, valves and fixtures. The sanitary disposal system includes the drain, waste and vent pipes, traps, sewer connections and septic (if present).

Qualified Person Person demonstrating the knowledge, skill and experience required to perform the work in accordance with the RRS or referenced code. Regarding electrical, plumbing and HVAC work, qualified may also mean a person who is certified or licensed, or whose primary occupation is in those residential trades.

Unconditioned Space Those portions of a building which are not heated (or not cooled). In the context of the RRS, these areas are generally those which are intentionally not heated (or cooled).

Inhabitable Space	The spaces in a building or a structure on the premises which are not designed or built for habitation and therefore are inappropriate for residential living. Generally, inhabitable spaces are outside of the dwelling's thermal boundaries. Examples of inhabitable spaces include; unfinished attics, basements, crawlspaces, garages, porches, sheds and other out-buildings.
Vapor Retarder	A material that retards the passage of water vapor. Vapor retarders must have a permeance rated at not greater than 1 perm. Commonly used vapor retarders include, 6 mil polyethylene sheeting and specialty paints.

RESIDENTIAL REHABILITATION STANDARDS

INDEX

Topic/Measures	Chapter Section	Page
Administration		
Classification of Measures	1.7	8
Completion of Measures	1.2.2.2	4
Intent of the RRS	1.1	1
Enforcement	1.4	7
Scope	1.7.1	8
Accessibility		
General Requirements	6.5	89
Bathroom	6.4.2	88
Air Movement		
Air Sealing	2.5.2.2	25
Air Movement	2.6.3	27
Exhaust and Ventilation Fans	2.6.4	29
Asbestos		
Asbestos	6.7	91
Attic		
Access	2.5.3	25
Electrical Receptacles and Fixtures	Appendix 4-A	124
Insulation	2.6.5	30
Ventilation	2.5.2.1	24
Basement		
Foundation Walls	2.1.2	13
Bedrooms	6.3.1	86
Escape and Rescue Openings	6.6.1	89
Door & Windows	2.4	22
Electrical Receptacles and Fixtures	Appendix 4-A	124
Floors	2.1.8	17
Moisture Control	2.1.6	15

Bathroom

General Standards	6.4.2	88
Electric Receptacles and Fixtures	Appendix 4-A	124
Plumbing	5.3	73
Ventilation	2.6.4	29
Bathtub/Shower	5.3	73
Lavatories	5.3.1	73

Bedroom

General Standards	6.3.1	86
Basement Bedrooms	6.6.1	89
Electric Receptacles and Fixtures	Appendix 4-A	124

Cabinets (Kitchen)

Counter Top Space	6.4.1	87

Chimneys & Fireplaces (Solid Fuel)

General Standards	3.1	38
Inspection	3.2	38

Chimneys & Fireplaces (Fuel Gas)

General Standards	3.3	39
Inspection	3.2	38

Crawlspace

Foundation Walls/Piers	2.1	13
Access	2.1.5.1	15
Moisture Control	2.1.6	15
Ventilation	2.1.7	16
Floor Insulation	2.6.7	32
Perimeter Insulation	2.6.8	33

Decks/Porches	2.7	33

Doors (Exterior)

General Standards	2.4.4	23
Repair & Replacement	2.4.4	23

Doors (Interior)	2.4.5	23
Driveways	6.1.5	81
Drywall	2.3.6	21

Electrical System

General Requirements		50
Inspection	Appendix 4-A	124
Installation, Repair and Replacement	4.1.4	52
Existing Wiring & Fixtures	4.1.6	53
Material and Equipment	4.1.8	54
Exterior Wiring	4.1.8	54
Grounding	4.2	54
Service Entrance	4.3.2	56
Load Calculations	4.3.1	55
Sizing – Capacity – Load Calculation	4.3.3	56
Main Service	4.3.5	56
Over Current Protection	4.3.6	57
All Electric Homes	4.3.4	56
Sub-Panels	4.3.8	57
Branch Circuits	4.4	58
Dedicated Circuits	4.4.1	58
Load Distribution	4.4.2	59
Premises Wiring	4.5	59
Receptacles	4.6	61
Exterior Receptacles	4.6.8	63
GFCI Protected Receptacles	4.7	64
Smoke Detectors	4.9	66

Emergency Egress 6.6.1 89

Energy Efficiency

General Standards	2.6	26
Uncontrolled Air Movement	2.6.3	27
Attic Air Sealing	2.5.2.2	25
Heat Loss Calculation	Appendix 2-B	109
Ceiling Insulation	2.6.5	30
Floor Insulation	2.6.7	32
Foundation Insulation	2.6.8	33
Sidewall Insulation	2.6.6	31
Green Building	2.11	35

Fireplaces

Chimneys and Fireplaces	3.2	38

Fire & Carbon Monoxide Safety

Emergency Egress	6.6.1	89
Storing Flammable Materials	6.6.4	90
Installing Flammable Materials	6.6.5	91
Smoke Detectors	6.6.3	90
Carbon Monoxide Detectors	6.6.3	90

Flood Plain Management	6.9	93
Floors		
General Standards	2.2	18
Basement	2.1.8	17
Floor Coverings	2.2.5	19
Insulation	2.6.7	32
Foundations		
Replacement	2.1.1	13
Mortar Joints	2.1.2.4	14
Piers and Columns	2.1.3	14
Access Doors	2.1.5	15
Grading and Moisture	2.1.6	15
Moisture Barriers	2.1.7.1	16
Vapor Barrier	2.1.8.3	18
Insulation	2.6.7	32
Fuel Gas Piping		
General Standards	3.9	48
Inspection and Testing	3.9	48
Piping, Connections, and Valves	3.9	48
Furnaces		
General Requirements		38
Source of Heat	3.1	38
Chimneys and Vents	3.3	39
Heating Equipment (All Fuels)	3.4	40
Combustion Safety	3.4.1	40
Sizing of Replacements	3.4.6	42
Combustion Air Requirements	3.4.11	43
Garages & Outbuildings		
Electrical Receptacles and Fixtures	Appendix 4-A	124
Existing Structures	6.1.2.1	79
New Structures	6.1.2.2	80
Repair	6.1.2.1	79
Grading		
Foundation/Site	6.1.2.2	80
Gutters & Downspouts	2.5.5	26

Habitable Rooms

General Standards	6.3	86
Receptacles and Fixtures	4.6	61
Ventilation	6.2.2	84
Occupancy Limitations	6.2.3	85

Habitable Spaces	6.3	86

Bedrooms	6.3.1	86
Other Habitable Spaces	6.3.2	87
Occupiable Spaces	6.4	87
Storage/Utility Rooms	6.4.3	88
Accessibility	6.5	89

Historic Preservation	6.8	93

HVAC Cooling Equipment

General Standards	3.6	44
Inspection	3.6.3	44
Replacement	3.6.2	44

HVAC Heating Equipment

General Requirements		38
Source of Heat	3.1	38
Chimneys and Vents	3.3	39
Heating Equipment (All Fuels)	3.4	40
Combustion Safety	3.4.1	40
Sizing of Replacements	3.4.6	42
Combustion Air Requirements	3.4.11	43
Equipment Inspections	3.5	43

Indoor Air Quality	6.7.2	91
Insulation	2.6.1	26

Pre-Existing Insulation	2.6.2	27
Attic Insulation	2.6.5	30
Sidewall Insulation	2.6.6	31
Floor Insulation	2.6.7	32
Perimeter Insulation	2.6.8	33

Kitchens

General Standards	6.4.1	87
Electric Circuits	4.4.1	58
Electric Receptacles and Fixtures	4.6.7	63
GFCI Protection	4.7	64
Fixture and Switch Location	4.8.2.1	65

Kitchens (continued)

Fixture Selection Energy Considerations	4.8.3	65
Food Preparation/Storage	6.4.1	87
Plumbing Supply	5.2	69
Supply Lines and Fixtures	5.2.4.2	71
Plumbing Fixtures	5.3.2	73
Sanitary Drainage	5.4	74
Traps	5.4.3	75
Vents	5.4.4	76

Laundry Room

Electric Circuits	4.4.1	58
Receptacles and Fixtures	4.6.7	63
GFCI Protection	4.7	64
Fixture and Switch Location	4.8.2.1	65
Fixture Selection Energy Considerations	4.8.3	65
Plumbing Supply	5.2	69
Supply Lines and Fixtures	5.2.4.2	71
Plumbing Fixtures	5.3.2	73
Sanitary Drainage	5.4	74
Traps	5.4.3	75
Vents	5.4.4	76
Lavatories	5.3.1	73

Lead Based Paint

General Requirements		95
General Conditions	7.1	95
Personnel	7.2	96
Qualifications	7.2.2	96
	7.2.3	96
Risk Assessments	7.3.1	97
	7.3.1.2	97
	7.3.1.3	97
Presumption	7.3.1.1	97
Clearance	7.3.2	98
Change Orders	7.3.4	99
Specifications	7.4	100
De-Minims Levels	7.4.3	102
Qualifications	7.5	102
Documentation	7.6	103

Lighting

General Requirements	6.2	84
Lighting Fixtures	4.8	64

Material Standards

New Materials	1.9.1	11
Used Materials	1.9.2	12

Modular, Manufactured, and Mobile Homes

General Requirements	2.10	35

New Construction

Dwellings and Room Additions	2.9	34
Overcrowding	6.2.3	85
Green Building	2.11	35

Occupiable Rooms/Spaces	6.4	87
Kitchens	6.4.1	87
Bathrooms	6.4.2	88
Storage/Utility Rooms	6.4.3	88
Accessibility	6.4.3	88
Egress	6.6.1	89
Painting (Exterior)	2.3.5	20
Painting (Interior)	2.3.6	21

Plumbing

General Requirements		67
Inspection/Repair Requirements	5.1	67
	5.1.2	68
	5.1.3	68
Water Supply	5.2	69
Water Quality	5.2.2	69
Hose Bibs	5.2.3.2	70
Water Pressure	5.2.4	70
Fixtures and Shut-Offs	5.2.5.2	72
Fixtures	5.3	73
Air Gaps	5.2.6	72
Piping Support	5.2.7	72
Dielectric Unions	5.2.8	72
Anti-Scald Valves	5.3.2	73
Sanitary Drainage	5.4	74
Traps	5.4.3	75
Vents	5.4.4	76
Air Admittance Valves	5.4.4 g	77

Porches and Uninhabitable Additions		
General Standards	2.7	33
Repair or Removal	2.7	33
Premises and Property		
General Conditions	6.1	78
Grading and Drainage	6.1.3	80
Paved Surfaces	6.1.5	81
Retaining Walls	6.1.6	81
Rubbish/Garbage	6.1.7	82
Trees and Shrubs	6.1.9	83
Garages/Outbuildings	6.1.2	79
Vermin and Materials	6.1.8	82
Finish Grade/Seed	6.1.9.2	83
Roofs	2.5.4	25
General Requirements	2.5.4.1	25
Flashings and Drip Edge	2.5.4.2	25
Gutters and Downspouts	2.5.5	26
Septic Systems	5.4	74
Approved Systems	5.4.1	74
Installation Details	5.4.2	75
Sidewalks	6.1.5	81
Siding	2.3.5	20
Sinks	5.2.5.2	72
	5.3	73
	5.3.1	73
	5.3.2	73
Smoke Detectors	4.9	66
Stairs		
General Standards	2.8	34
Handrails	2.8.1	34
Guardrails	2.8.3	34

Structural Integrity

Foundations	2.1	13
Floors	2.2	18
Walls	2.3	20
Roofs	2.5	24
Notching for Electrical	4.1.7	53
Notching for Plumbing	2.2.3	19
Water Heaters	3.8	46
General Requirements	3.8.2	46
Inspection/Replacement	3.8.3	47
Water Supply	5.2	69
Water Quality	5.2.2	69

Ohio Housing Finance Agency

A GUIDE TO DRAWING HDAP

OHIO **HOUSING** FINANCE AGENCY

web www.ohiohome.org | **tollfree** 888.362.6432

The Ohio Housing Finance Agency is an Equal Opportunity Housing entity. Loans are available on a fair and equal basis regardless of race, color, religion, sex, familial status, national origin, military status, disability or ancestry. Please visit www.ohiohome.org for more information.

Table of Contents

Introduction
- Basic Policies 3

Drawing Funds
- Documentation 5

Timing 6

Forms and Instructions
- Request for Payment & Status of Funds Report 7
- Signature Card 9
- Signature Certification 11
- Automated Clearing Housing (ACH) 13
- HDAP Draw Checklist 15

INTRODUCTION

This Guide has been created to assist organizations in accessing funding awarded through the Housing Development Assistance Program (HDAP). Whether HDAP is awarded to organizations for projects that also receive an allocation of Housing Credits (Housing Credit Gap Financing) or smaller projects that leverage other public and/or private resources (Housing Development Gap Financing), the procedures identified in this Guide are identical. Therefore, the acronym HDAP will be used and will apply to both types of projects.

Organizations that receive funding are referred to as Recipients. Recipients must review both the application submitted for the funding as well as the funding agreement itself. Both of these will be used in reviewing Requests for Payment and Status of Funds Report (Draws).

Basic Policies

1. The procedures in this manual are applicable only to funding agreements issued by the Ohio Housing Finance Agency (OHFA). In no event shall a request for payment be submitted to obtain funds for activities until the applicable agreement conditions, if any, have been satisfied. Failure to comply with this provision and the procedures as outlined may result in suspension or revocation of the award. If funding is suspended, it will be activated only upon satisfactory proof that the conditions and procedures have been satisfied.

2. OHFA processes requests for payment of eligible expenses only if the expense has been incurred and must now be paid or if the expense has been paid and OHFA is reimbursing the applicant.
   - Applicants may only draw funds as evidenced on the Development Budget detailed in the application (AHFA) and summarized in the executed Funding Agreement. This budget must be consistent with the Construction Contract and the Schedule of Values in that contract. Applicants will be required to evidence the appropriate party has been reimbursed for expenses incurred, including pre-development costs and soft costs.

3. **Important:** OHFA will not advance funds for materials stored off-site unless arrangements were made prior to and during the closing process.

4. Developer fee paid by HDAP will be released on a pro-rated basis consistent with construction progress, unless otherwise stipulated in any closing/partnership documents or developer agreement.

5. All Recipients must receive the funds through Automated Clearing House (ACH).

6. In the event of excessive drawdowns - defined as drawing more funds than can be used to reimburse the Recipient for current obligations - the State requires the Recipient to refund excess cash to the OHFA. Contact OHFA for instructions regarding refunds.

7. OHFA will "Hold Back" 10% of the HDAP Award until the project has completed construction and provided OHFA with a completed and accurate Final Performance Report.

Drawing Funds

OHFA is committed to ensuring Recipients receive funds expeditiously. By adhering to the draw process outlined below, and by working together, OHFA and funding Recipients can ensure that projects receive funds in a timely manner.

Prior to drawing funds

The initial draw will not be released until the OHFA Legal staff has confirmed that 1) the project has closed on the loan (all closing conditions have been met), and 2) funds may be released. In addition, the project ownership must have received confirmation ***from OHFA*** that the Environmental Review Process has been completed.

Recipients are required to provide the following documentation prior to drawing any funds:

- Signature Card
- Signature Certificate
- Automated Clearinghouse (ACH) Set-up Form
- W-9 Form

OHFA will send the necessary forms to the recipient along with their funding agreement(s). Recipients will be required to return all documents to OHFA promptly. A description of each of these as well as completion instructions is included in this Guide.

There are several policies and features of the draw process that a Recipient should keep in mind when drawing funds.

Documentation:

All documents provided in connection with a draw request must contain original signatures. OHFA will not accept copies or stamps of signatures.

Projects may only draw once each month. OHFA will require the following documentation for each draw request:

1. Draw requests must be submitted on the appropriate OHFA Form. The request must have ***original signatures***.
    a. Draws will only be funded for work completed and must now be paid or for work completed and paid and OHFA is providing funds for reimbursement.
    b. Draws will be processed for work completed in the ***current 30-day period*** and only for work completed on eligible activities. Two exceptions for this include:
        i. The first draw which may include eligible activities completed prior to application; and
        ii. For the final draw, which will be the 10% holdback?
2. Recipients must provide a current AIA G702/3 (Application and Certificate for Payment/ Continuation Sheet) or other form approved by OHFA. The form must be signed by the owner, general contractor and the owner's architect, and should have the architect's seal either embossed or stamped.
3. OHFA may request to see all change orders (G701) approved for a project.
4. A date-down title endorsement current through the previous draw period. Recipient will be required to provide another date-down endorsement 30 days after the HDAP draw.
5. OHFA may request to review copies of draw requests submitted to all other project-funding sources. This includes draw requests submitted to local government, commercial lenders, or any other provider of funds. If the Recipient cannot produce these within a reasonable period, OHFA may elect to place a "hold" on future draws until such time as OHFA can review those draws. If all of the funds have been drawn, OHFA will consider another course of action (such as holding the issuance of the 8609's or limiting access to OHFA funds in future projects).

6. Recipients may be required to provide the most recent Field Inspection Report completed by the Syndicator/Limited Partner.

7. Recipients should provide the most recent Draw Inspection Report provided by the construction lender, if available.

8. The final draw to OHFA must include an AIA G704 Certificate of Substantial Completion.

Timing

OHFA will process draw requests within 5 business days of receipt.

Delays:

Often, draw requests are delayed because the Recipient has failed to submit required documentation/forms. This may include supporting documentation for the draw request or other documents required periodically through the constructions phase (e.g. status reports). Therefore, prompt responses to requests are necessary to ensure draws are processed promptly.

Recipients should download the current Request for Payment and Status of Funds Report (Draw Form) from the OHFA website or contact the OHFA Staff Analyst assigned to the project. OHFA Analyst will also answer any questions about the draw process.

Staying Informed

At a minimum, OHFA will post an updated draw log on the Project Administration page of the OHFA website each week. Recipients should review this prior to calling OHFA for updates.

SAMPLE REQUEST FOR PAYMENT AND STATUS OF FUNDS REPORT

57 East Main Street, Columbus, Ohio 43215 | Phone 614.466-0400 | Fax 614.466.0606

OHIO HOUSING FINANCE AGENCY

Request for Payment and Status of Funds Report

Project Name: 1
OHFA Tracking Number: 2
Funding Agreement Number: 3

ITEMIZATION OF EXPENSES:

Activity Name (New Construction, Rehab Construction, Prof. Fees, etc.)	Activity Budget	Amount of This Draw	Cumulative Amount Drawn	Balance
4	5	6	$ 7 -	$ 8 -
			$ -	$ -
	$ -		$ -	$ -
	$ -		$ -	$ -
	$ -		$ -	$ -
	$ -		$ -	$ -
TOTAL DRAW	$ 9 -		$ 10 -	$ 11 -

GENERAL INFORMATION:

Submit to:
Planning, Preservation & Development
Ohio Housing Finance Agency
57 East Main Street
Columbus, Ohio 43215

Name and Address of Funding Recipient: 12

Contact Person for Recipient:

Recipient's Telephone Number: 13

Recipient's Email Address:

Date of HDAP Loan Closing 14

FTI Number: 15

Draw Number: 16

CERTIFICATION ***(Two Signatures are Required)***

I certify that this Request for Payment was drawn in accordance with the terms and conditions of the Funding Agreement(s) cited and that the amount drawn is proper for payment to the drawer's depository. I also certify that the data reported above is correct and that the amount of the Request for Payment is not in excess of current needs.

17

Date	Signature	Title
Date	**Countersignature**	**Title**

STATE USE ONLY (DO NOT COMPLETE BELOW)

Date **Signature of Approval**

Date Logged: **Date to Finance:**

Revised 2/1/08

Instructions for Completing Request for Payment and Status of Funds Report (Draw Form)

Request for Payment a.k.a. Draw Request – Instructions

1. Enter the name of the project as it appears on the Funding Agreement
2. Enter the OHFA Tracking Number
3. Enter the Funding Agreement Number

ITEMIZATION OF EXPENSES

4. Enter the Activity Name for which the HDAP funds have been awarded. This must agree with the Activities detailed in the Funding Agreement, Attachment A, HDAP Program Budget.
5. Enter the amount of HDAP awarded for each activity as detailed in the Funding Agreement, Attachment A, HDAP Program Budget.
6. Enter the amount being requested, by activity, rounded to the nearest dollar.
7. Enter the total amount drawn to date, including the amount in current draw form, rounded to the nearest dollar.
8. Enter the undrawn, remaining balance for each activity. If using the form through Excel, this field will automatically calculate.
9. Enter the total amount being requested in the current draw request. If using the form through Excel, this field will automatically calculate.
10. Enter the total amount requested to date, including the current draw request. If using the form through Excel, this field will automatically calculate.
11. Enter the total yet to be drawn on the award. If using the form through Excel, this field will automatically calculate.

GENERAL INFOMRATION

12. Enter the name and address of the HDAP Recipient as it appears in the Funding Agreement.
13. Enter the contact information for the HDAP Recipient.
14. Enter the date the HDAP award closed with OHFA legal.
    IMPORTANT: This is the date that all of the OHFA closing documents were fully executed. OHFA Legal will send an email to the project partners affirming this date.
15. Enter the FTI number of the HDAP Recipient. This must agree with the Funding Agreement and all other supporting documents (W-9 Form, ACH Form, etc.)
16. Enter the total number of draws submitted for the project, including the current draw.

CERTIFICATION

17. The draw form must be signed and countersigned by authorized staff. The signatories must be among those identified in the Signature Card.

SAMPLE SIGNATURE CARD

57 East Main Street, Columbus, Ohio 43215 Phone: 614.466.0400 Fax: 614-466-0606

OHIO **HOUSING** FINANCE AGENCY

Authorized Signature Card for Request for Payment and Status of Fund Report

PROJECT NAME: 1

Grant issued in favor of (Recipient) 2	Issued by the State of Ohio Ohio Housing Finance Agency 57 East Main Street Columbus, OH 43215
Typed Name, Title and Signature 3	Typed Name, Title and Signature 3
Typed Name, Title and Signature 3	Typed Name, Title and Signature 3

NOTE: A minimum of two signatures are required on every Request for Payment and Status of Funds Report (Draw).

I certify that the above signatures are of the individuals authorized to sign the Request for Payment and Status of Funds Reports (Draw).

4

Date Signature of Authorizing Official (Recipient)

The authorizing official must also complete and submit the Signature Certificate.

This document hereby supersedes any and all previous forms “Authorized Signature Card for Payment and Status of Funds Report” submitted by the Recipient for the project noted. All previous forms are hereby null and void.

Instructions for Completing an Authorized Signature Card for Request for Payment and Status of Funds Report

If a mistake is made, or a change is necessary during the preparation of the Authorized Signature Card for Request for Payment and Status of Funds Report, please prepare a new one (erasures or corrections of any kind will NOT be acceptable). A sample Signature Card is presented on the following page. The numbers below correspond with the appropriate box on the Card. Signature cards may be requested by contacting the OHFA at (614) 466-0400.

1. Enter the name of the project as it appears on the Funding Agreement.

2. Enter the name and address of the recipient organization, as it appears on the funding agreement. If additional space is required, use the backside of form.

3. Enter typed names and signatures of up to four officials of the recipient organization, which are authorized to execute DS5s or Request for Payment and Status of Funds reports. It is recommended that a minimum of three signatures be shown to permit flexibility in making drawdowns. There must be at least two signatures.

4. Enter the date, typed name, and signature of the recipient organization's chief executive officer as it appears on the Signature Certification (Sample on Page 35). The CEO's signature must be notarized.

SAMPLE SIGNATURE CERTIFICATION

57 East Main Street, Columbus, Ohio 43215 Phone: 614.466.0400 Fax: 614-466-0606

OHIO HOUSING FINANCE AGENCY

Signature Certification

_____
Signature of Authorizing Official

This is to certify that the above is the signature of

_____ _____
(Typed Name) (Title)

of _____
(Name of HDAP Recipient)

Subscribed and duly sworn before me according to law, by the above mentioned individual this

day _____ of _____, 20____ County of _____

State of _____.

Signature of Notary

_____

Instructions for Completing the Signature Certification

This certification letter must be completed by the official of the Recipient of the award who has the authority to identify individuals within their organization to sign the Request for Payment and Status of Funds Report. This authorized official must also sign the bottom of the Signature Certification.

1. Signature of the official within the Recipient's organization who has authority to designate staff to sign the Request for Payment and Status of Funds Report (Draw) on behalf of the Recipient.
2. Type the name of the official signing the document on behalf of the Recipient.
3. Enter the title of the official signing the document on behalf of the Recipient.
4. Enter the legal name of the Recipient of the award as it appears on the funding agreement.
5. The section to be filled out by the notary.

SAMPLE OF AUTOMATED CLEARINGHOUSE SETUP FORM

57 East Main Street, Columbus, Ohio 43215 | Phone 614.466-0600 | Fax 614.466.0606

57 East Main Street
Columbus, OH 43215
www.ohiohome.org

Authorization Agreement
For Direct Deposit - Automated Clearing House

1. Type or Print the information requested, sign, date and return to the Ohio Housing Finance Agency (OHFA).
2. Include a Voided Check for the account.
3. Any address or account changes must be reported to OHFA 30 days prior to the actual change.

SECTION I

A. Type of Transaction: ☐ ADD ☐ CHANGE ☐ DELETE

B. Name of Company _____ County _____ (Area Code) Telephone Number _____

Address _____ City _____ State _____ Zip Code _____

C. Federal Tax ID number ☐☐☐☐☐☐☐☐☐

SECTION II

A. Financial Institution Name _____ County _____ (Area Code) Telephone Number _____

B. Type of Account: ☐ Savings ☐ Checking

☐☐☐☐☐☐☐☐☐
Transit routing/ABA Number

C. ☐☐☐☐☐☐☐☐☐☐☐☐☐☐☐
Account Number at Above Institution

Whereby authorize the Ohio Housing Finance Agency to initiate credit entries to our account in the financial institution identified above and also debit entries, if necessary, for any credit entries that are determined to be in error. We additionally authorize the financial institution to credit or debit the same to our account.

This authority is to remain in effect until revoked by us in writing to the Ohio Housing Finance Agency or until terminated by the Ohio Housing Finance Agency.

_____
Applicant Signature

_____ _____
Typed Name Date

Instructions for Completing the Authorization Agreement: Direct Deposit - Automated Clearing House form

Section I:

A. Place a check-mark to indicate the type of transaction.
"Add" indicates a **new** authorization.
"Change" indicates a **change** to an existing authorization
"Delete" indicates a request for **termination** of direct deposit.

B. Enter the complete name and address of the company participating in the direct deposit.

C. Enter the company's Federal Tax Identification number as it appeared on the Funding Agreement, W-9 Form or other document submitted during the approval process.

Section II:

A. Enter the name and address of the financial institution authorized to conduct the transaction.

B. Place a check-mark to indicate the type of account to which the funds are to be deposited.
Enter the financial institution's Transit Routing/ABA number in the spaces provided. This is typically a nine digit number shown on the check. It may also be obtained by contacting the financial institutions and requesting the Transit Routing/ABA number.

C. Enter the account number to which the direct deposit is to be accredited. If less than 15 characters are needed, begin at the box furthest to the left and leave any unused spaces blank.

Forward the signed authorization form **and a copy of a voided check from that account** to:

Karen M. Banyai
Planning Preservation & Development
Ohio Housing Finance Agency
57 East Main St.
Columbus, OH 43215

57 East Main Street, Columbus, Ohio 43215 Phone: 614.466.0400 Fax: 614-466-0606

OHFA Request for Payment and Status of Funds Checklist

- ☐ 1. Completed OHFA Request for Payment and Status of Funds for the appropriate funding source with original signatures identified on the Signature Card.
- ☐ 2. Detailed AIA G702/703 with original signatures
  - a. Agrees with the AIA Construction Contract
  - b. Agrees with Att. D to the Tax Credit Exchange/Tax Credit Assistance Funding Agreement.
  - c. Reflects HDAP funds being drawn in the current period
- ☐ 3. The most recent Mortgagee's Title Insurance Endorsement (Date-Down Endorsement) but within 30 days of the current period.
  - a. Check for any matters affecting the status of the title to the real estate.
- ☐ 4. Copy of the lender's/HUD/RD's draw inspection report, if available.
- ☐ 5. Narrative signed by the owner describing the nature and reason for the change order and the AIA G701 signed by the owner, architect and general contractor. Supporting documentation (invoices, etc.) will not be required unless stated in advance. However, OHFA may request this at a later date.
- ☐ 6. Most recent Field Inspection Report from the Syndicator, if applicable.
- ☐ 7. FOLLOW UP: If HDAP was used to pay construction related activities, 30 days following draw, an updated date-down endorsement.
- ☐ 8. Final Draw: Final Performance Report and AIA G704

Items to Remember

1. Projects may only draw once within a 30-day period month.
2. 10% of the HDAP is withheld until the Final Performance Report has been received and reviewed by OHFA staff.
3. AIA Forms and the OHFA Draw Form must have all original signatures.
4. AIA 702/703 must agree with the Schedule of Values in the AIA Contract or the contract should be amended.
5. Draw for the Current Period Only. The only exception will be for the first and final draw.
6. Invoices will be required for costs not included in the AIA Contract. Evidence of payment must occur either with the draw or within 30 days.
7. OHFA will not fund for materials stored off-site unless arrangements were made prior to closing.
8. Draws will be held or returned to the Recipient if OHFA has requested documentation/ reports, which have not been received.
9. OHFA must be notified of any significant changes to the construction schedule or scope of work.